REX Electric grooving series

LIGHT GROOVE 150DX

Parts List

As of October 2008

CONTENTS

1. Guide roller
2. Roller support
3. Main shaft-Switch
4. Head stock
5. Base
6. Automatic pump
   /Hand pump (Old type)
7. Hand pump (New type)

REX

LightGroove150DX「Guide roller」

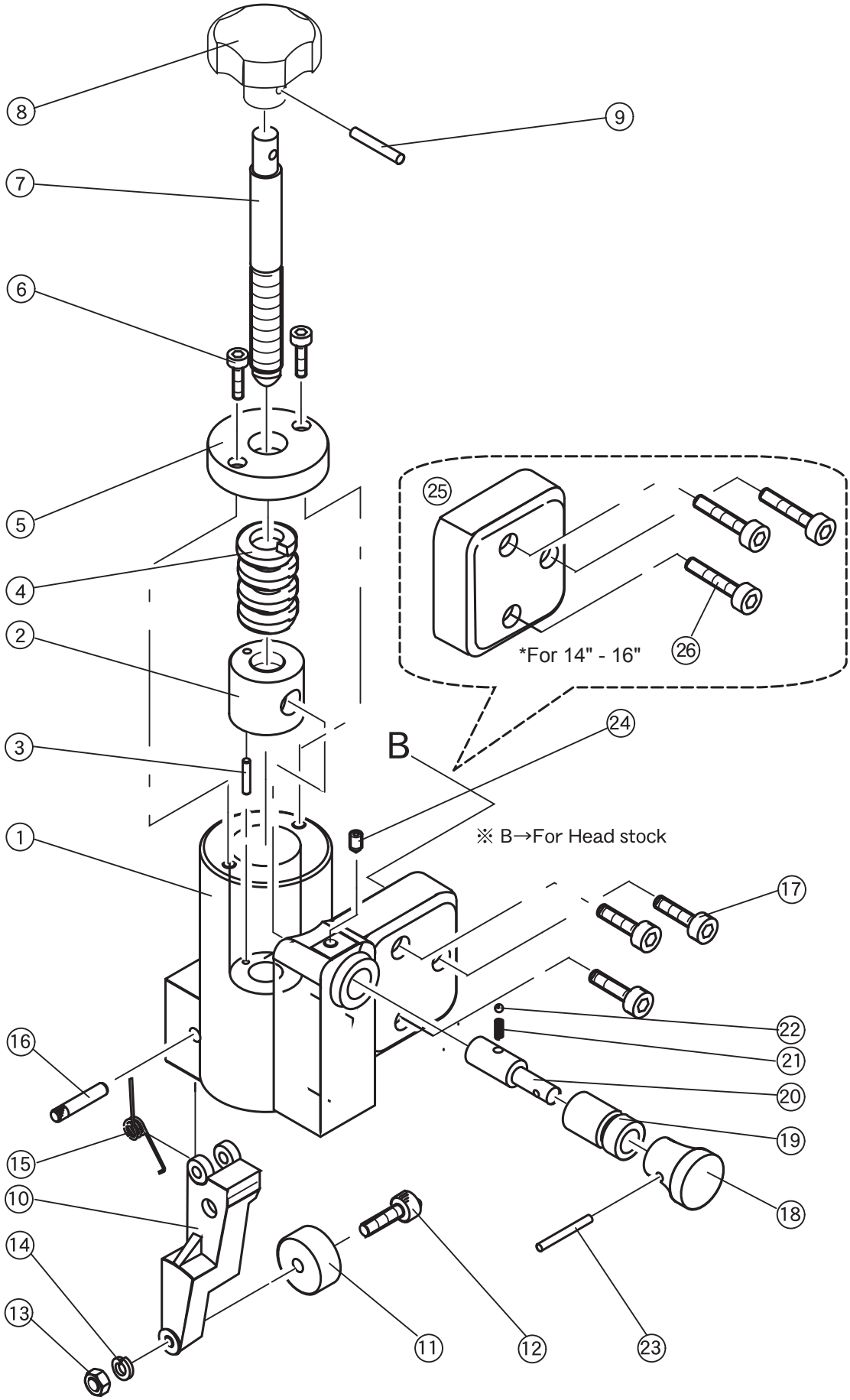

Light Groove 150DX「Roller support」

2019.10.25

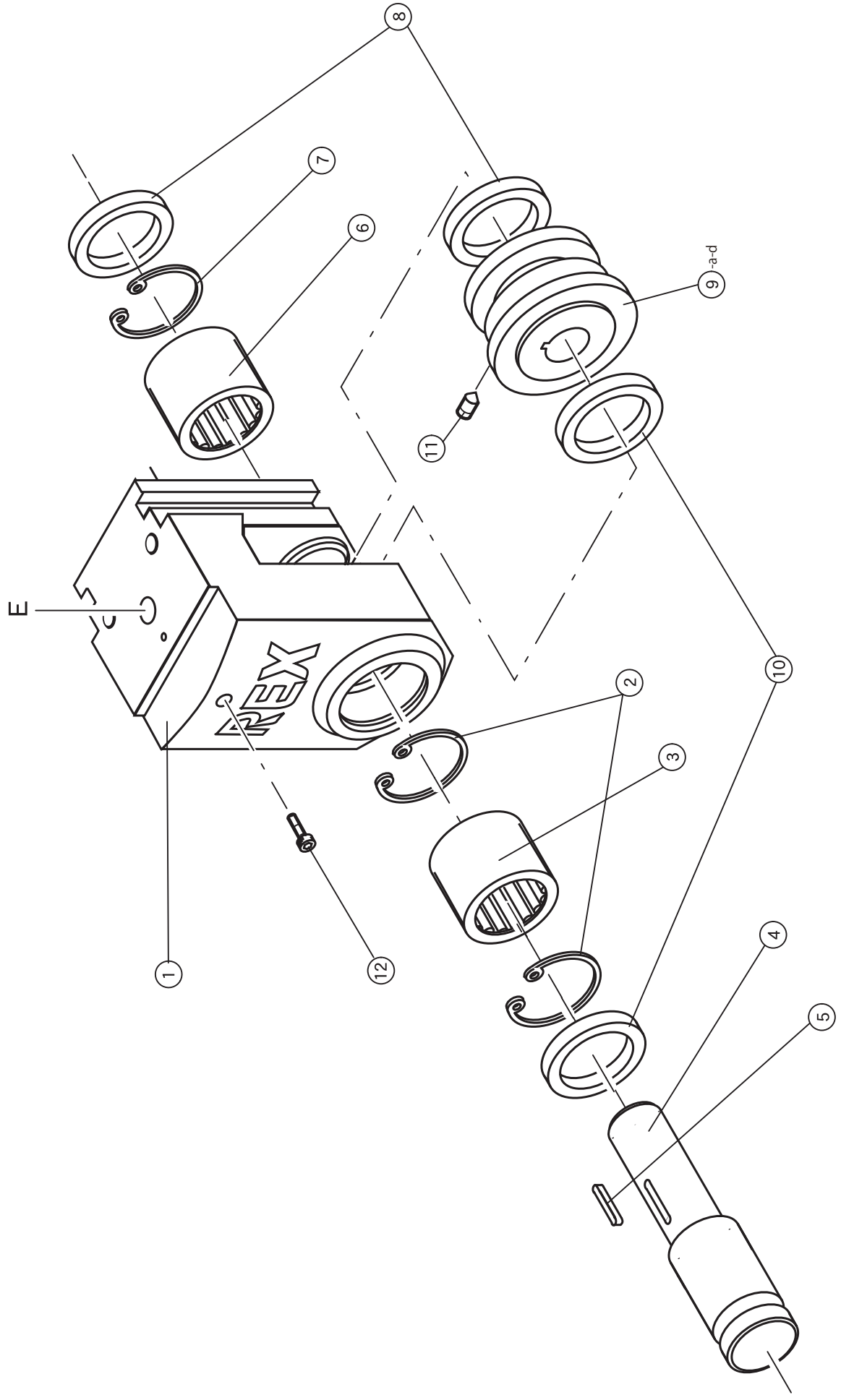

2

3

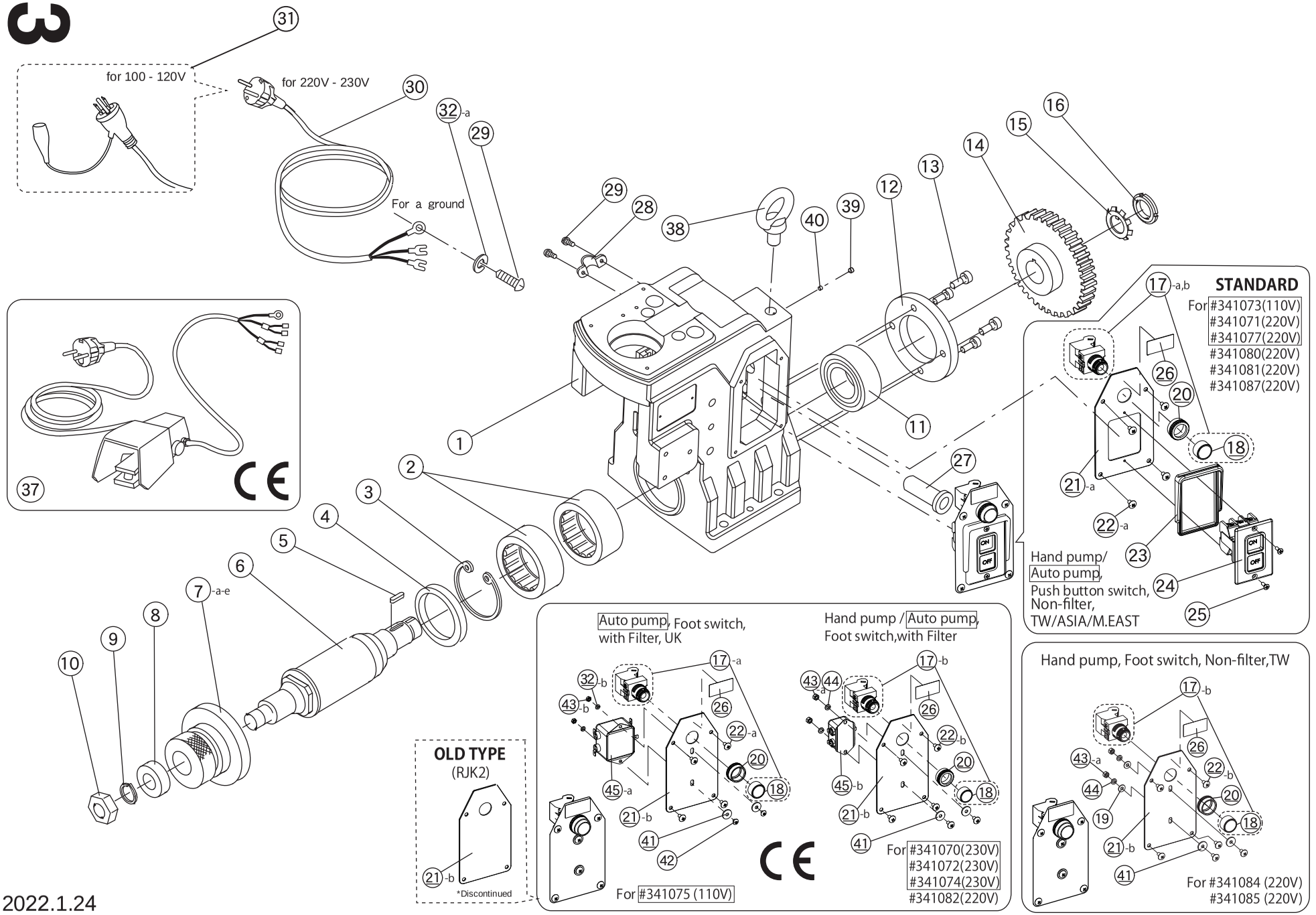
for 100 - 120V
for 220V - 230V
For a ground
STANDARD
For #341073(110V)
#341071(220V)
#341077(220V)
#341080(220V)
#341081(220V)
#341087(220V)
Hand pump/
Auto pump,
Push button switch,
Non-filter,
TW/ASIA/M.EAST
Auto pump, Foot switch,
with Filter, UK
For #341075 (110V)
Hand pump / Auto pump,
Foot switch,with Filter
For #341070(230V)
#341072(230V)
#341074(230V)
#341082(220V)
Hand pump, Foot switch, Non-filter,TW
For #341084 (220V)
#341085 (220V)
OLD TYPE
(RJK2)
*Discontinued

2022.1.24

Light Groove 150DX「Head stock」

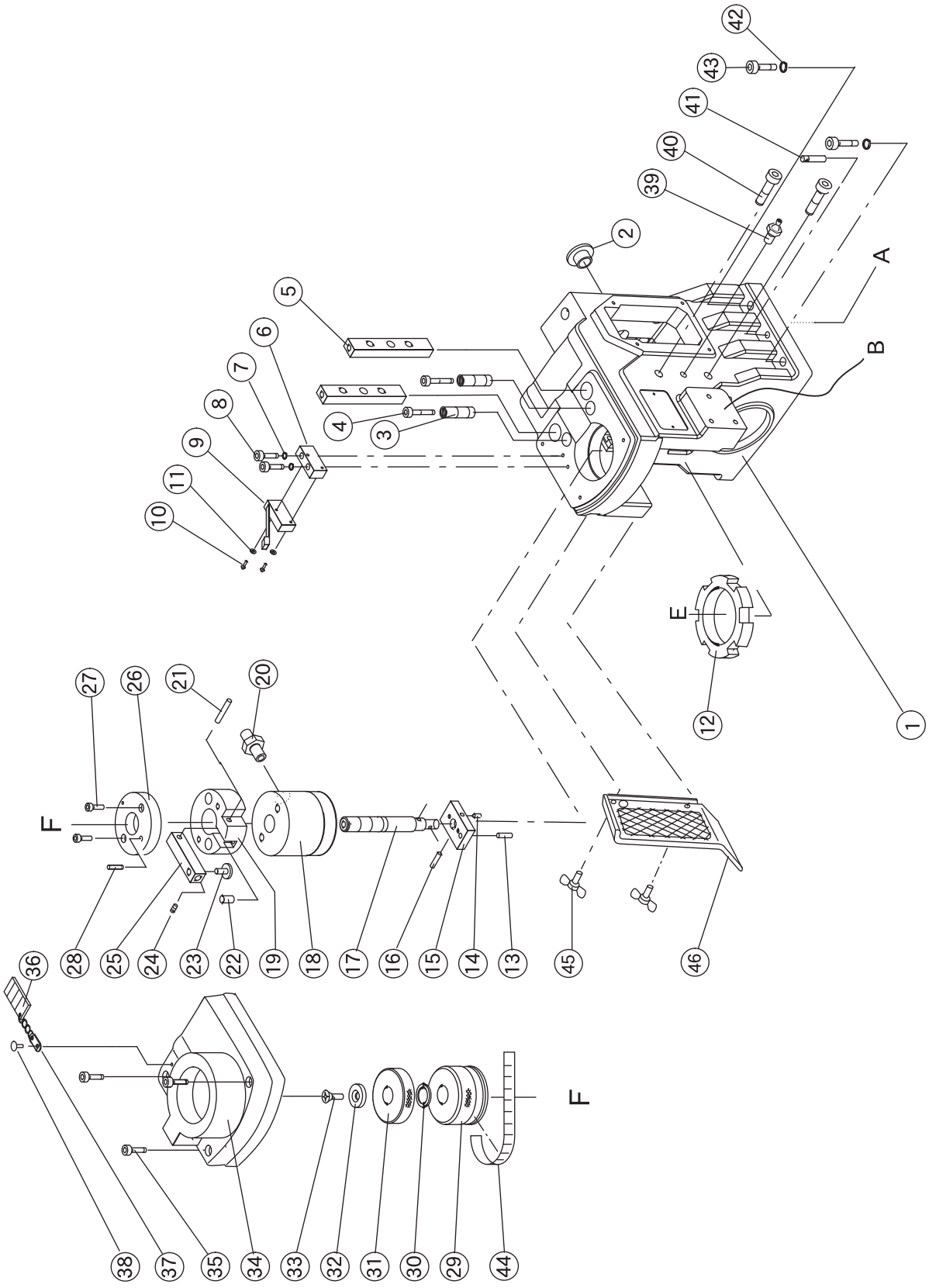

4

2018.7.11

Light Groove 150DX「Base」

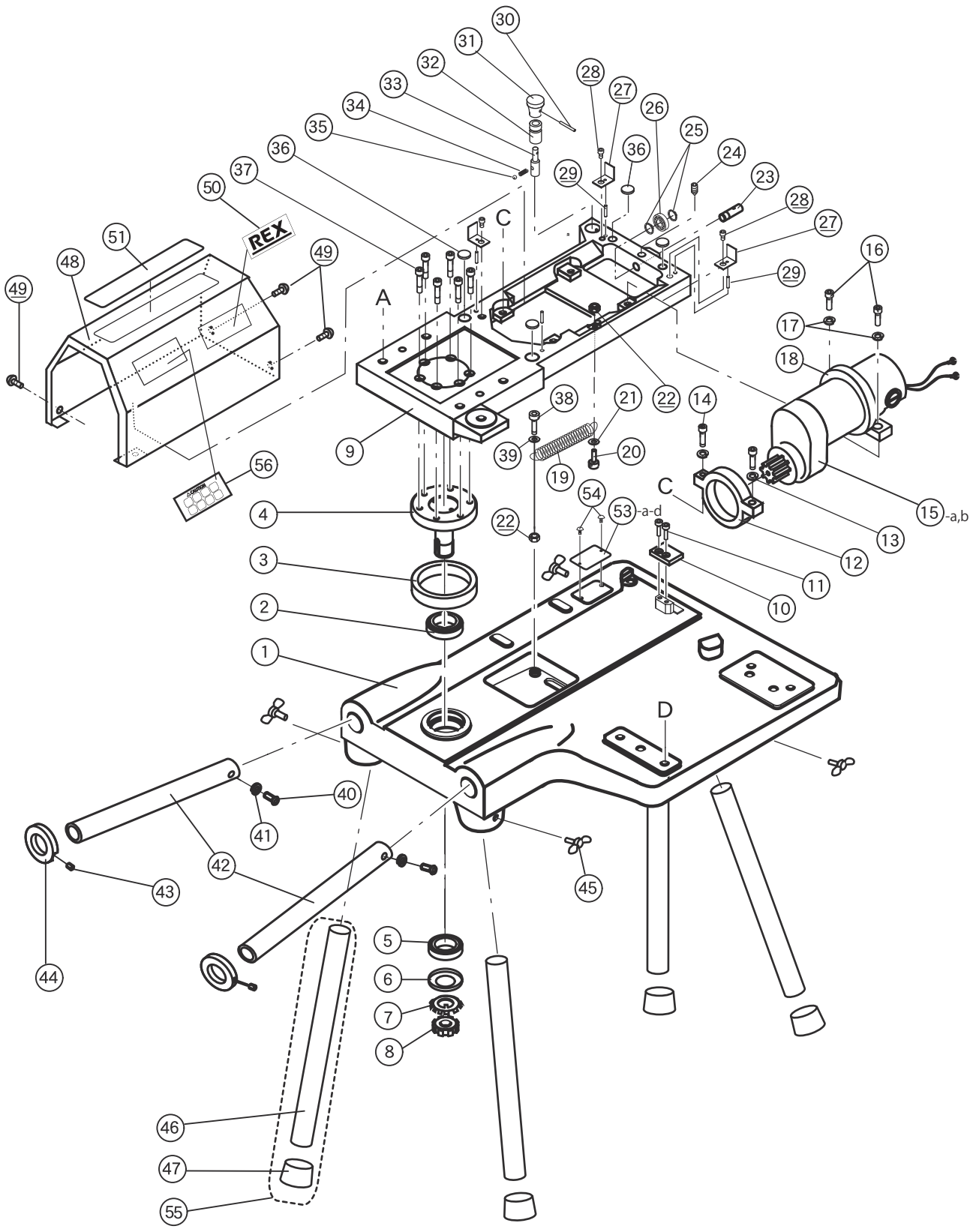

5

2020.4.15

Automatic pump

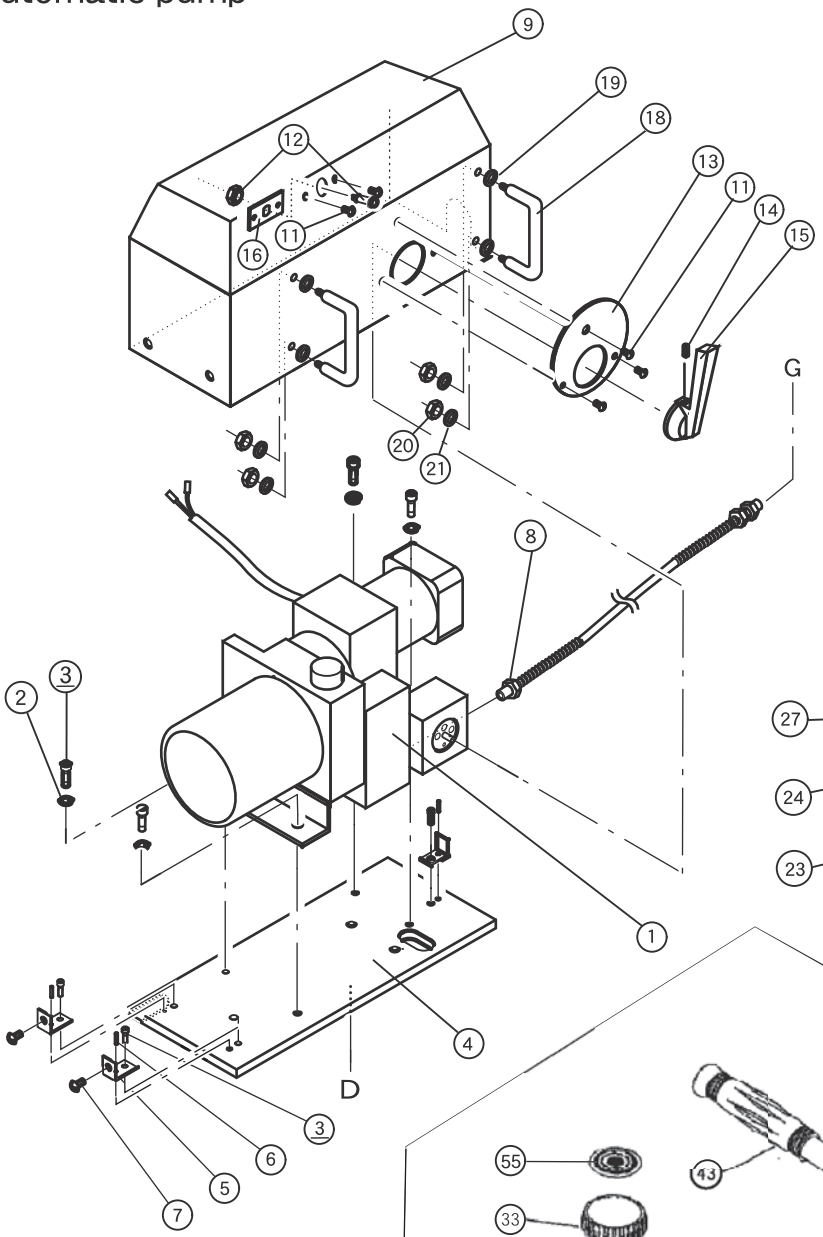

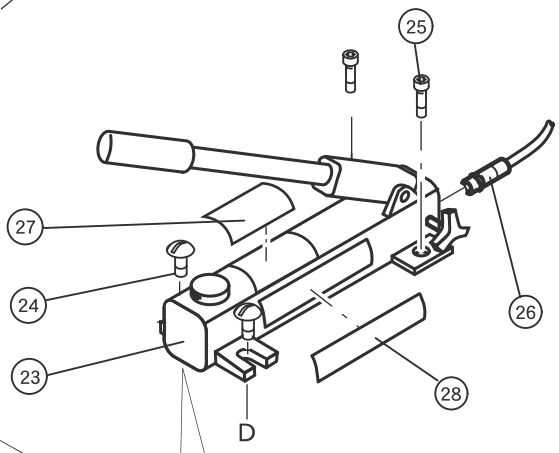

Hand pump
(Old type)

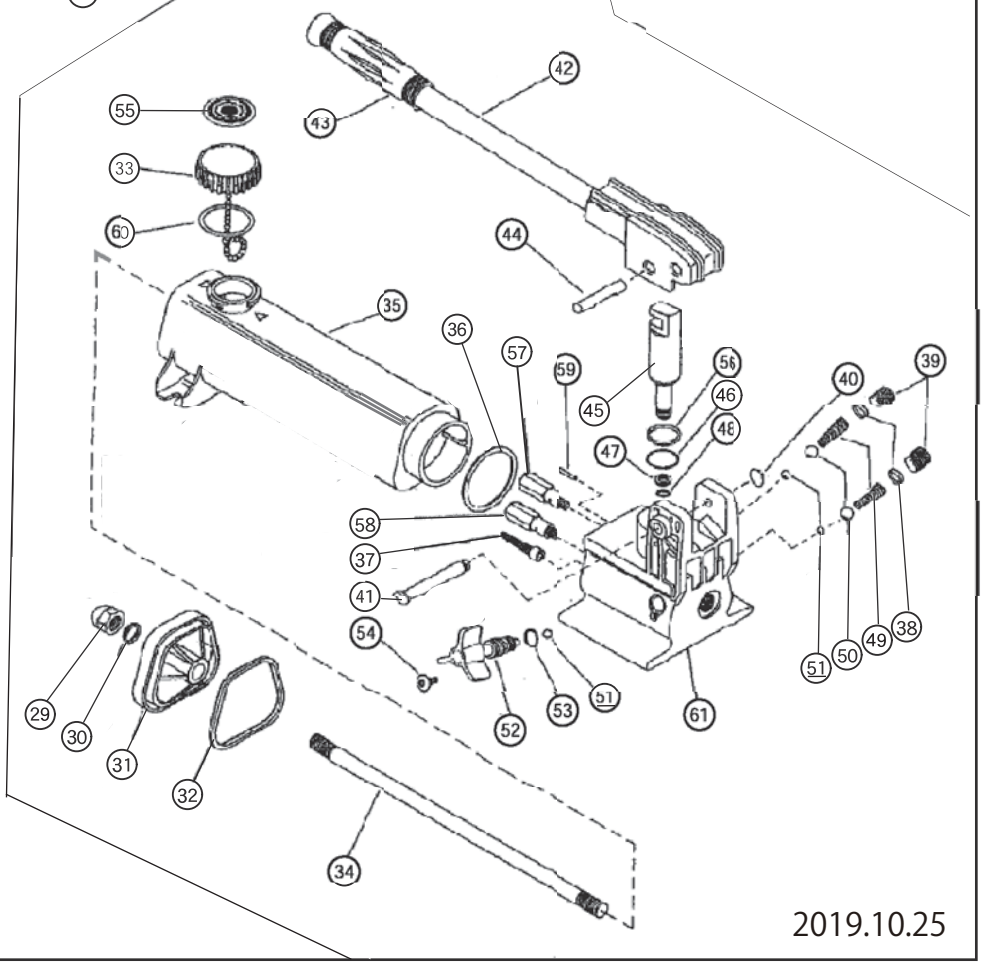

6

2019.10.25

Hand pump (New type)

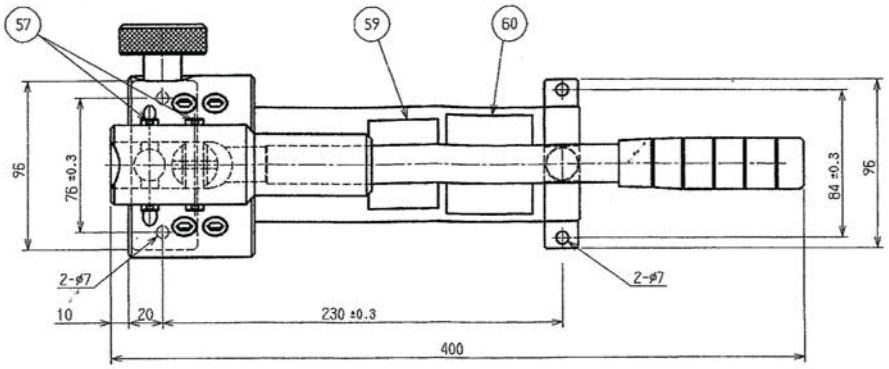

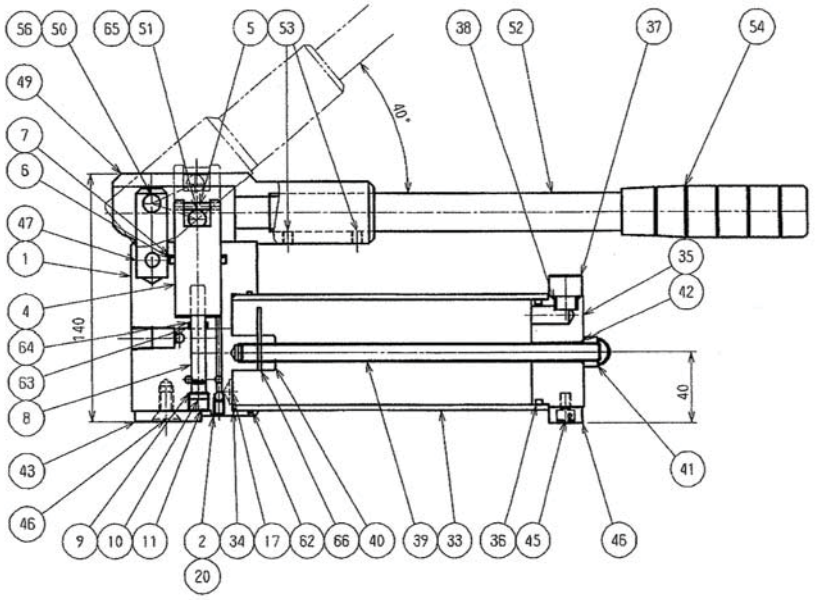

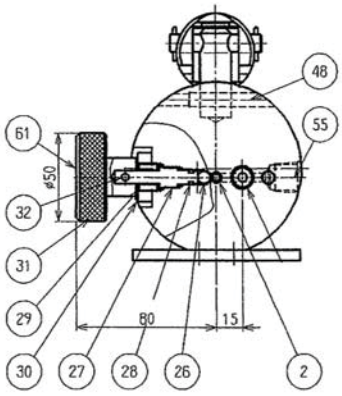

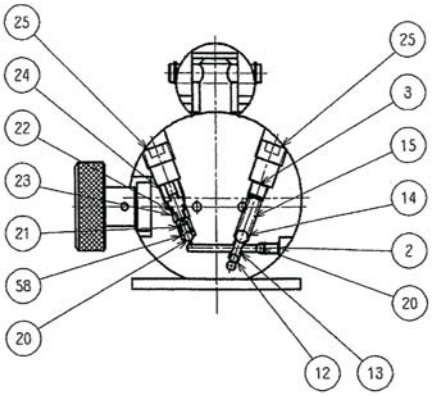

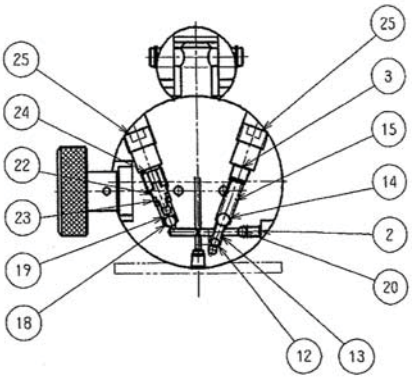

High pressure part cross section

Low pressure part cross section

2019.7.19

REX

www.rexInd.co.jp

REX INDUSTRIES CO., LTD.

Overseas Sales Section & Factory :
1-9-3, Hishiya-Higashi, Higashi-Osaka 578-0948 Japan
Tel.: 81 - 72 - 961 - 9820 Fax.: 81 - 72 - 961 - 9878
URL www.rexind.co.jp

●Specifications, colour, etc. may be changed without prior notification.

LG150DX-E7
2201R0000