REX

PIPE MACHINE

R50A,P50A,S80A

OPERATION MANUAL

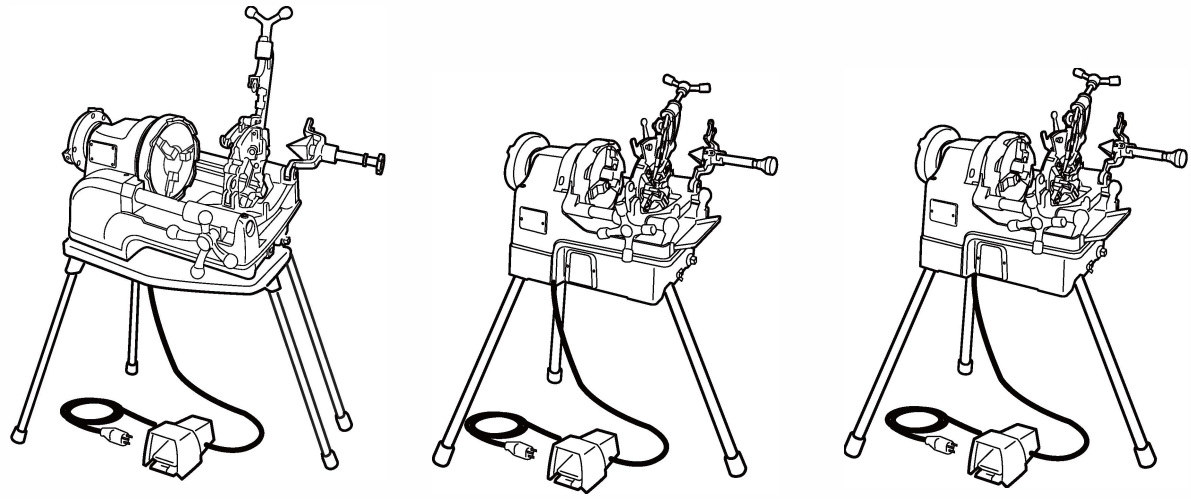

S80AV
S80AⅢ
S80A

R50AV
R50A

P50AV

CE

Be sure to read this
Operation Manual before
using the machine

▪ - Note -

Be sure to hand this operation manual to the user.
Carefully read through this operation manual before using the machine, to ensure safe and effective use.
Be sure to keep this operation manual where the operator can refer to it whenever necessary.

Date of purchase: □ Year□ Month

Sales agent:

- Be sure to observe the Safety Precautions described below to prevent accidents such as fire, electric shock and injury.
- Read these Safety Precautions carefully before using the machine, and operate the machine according to the instructions.
- Do not use the machine in any way other than as described in this instruction manual.

CONTENTS

Safety Precautions 2

Instructions for Using the Machines 4

Supplied Items and Main Parts 7

Specifications and Standard Accessories 8

Warranty 9

Operating Instructions 10

Maintenance & Care 22

Optional Accessories 24

Possible Causes of Malfunction 25

Definitions of ⚠WARNING and ⚠CAUTION

In this operation manual, warnings are divided into ⚠WARNING and ⚠CAUTION.

⚠WARNING : indicates actions which could possibily result in death or severe injury to the user if the machine is used incorrectly.

⚠CAUTION : indicates actions which could possibly result in injury to the user, or physical damage, if the machine is used incorrectly.

Even items described as ⚠CAUTION , could have serious results under certain conditions.
Be sure to observe these warnings carefully as they greatly affect safety.

If this operation manual is lost or damaged, promptly order a replacement from our agent or sales agent. Parts and specifications are subject to change without prior notice, due to improvements in quality, performance or safety standards. In such cases, the contents, photographs, illustrations, etc. of this manual may be different to the product you have purchased.

Safety re autions

⚠ WARNING

1) Ensure you use the c rrect voltage.
- Be sure to use the voltage indicated on the name plate of the ma n unit or n the operation manual. If the voltage is different from the voltage indicated, overheating, s oke or fire may ccur.

2) Check the switch is OFF before inserting the plug nt the power supply socket.
- If the plug is inserted into the power supply when the swit h is ON, the machine may sta t operation ab uptly and is liable to cause accidents. Be sure to check the swit h is OFF.

3) Be sure to avoid electric shock.
- Do not touch the plug with wet hands.
- Do not use the machine in rain or in places where water can easily get into the machine.
- Be sure to ground the machine to avoid electric shock.

4) Take notice of conditions at the work site.
- Do not use the machine in rain, humid or damp places, or places where water can eas ly get into the machine. Humidity will lower insulation of the motor and cause ele tr c shock.
- Do not use close to flammable fluids or gases, such as gas l ne and thinner. Fire or explos on might occur.

5) Use designated accessories and attachments.
- Do not use accessories and attachments other than those des gnated in the operation manual or ur catalogs. Accidents or injuries might result.

6) In the following cases, turn the main unit OFF and pull the plug out of the power supply socket.
- When the machine is not in use or parts are changed, repai ed, cleaned or inspected.
- When accessories are changed.
- When hazards are expected (including electric power failure)
  When the plug is inserted, the main unit may start operation unexpectedly, causing accidents.

7) If any abnormality is noticed, stop operation immediately.
- When the machine does not operate smoothly, or abnormalit es such as unusual odors, vibration or noise are detected, stop operating the machine immediately.
- Check symptoms against the items in the section entitled, "P ssible Causes of Malfunct on" at the end of this manual and observe the corresponding instructions. If the machine is used ontinuously, overheating, smoke or fire might occur, causing accidents or injury.
- If overheating or smoke from the unit occurs, do not attempt an verhaul yourself but ask for an inspection and repair.

8) Keep the work site clean.
- Ensure you keep the work table and the work site in good order, and well lit. A cluttered site and work table are liable to cause accidents.

9) Do not let unauthorized personnel near the machine.
- Do not let any people other than authorised personnel touch the ain unit or the power ord, or operate the machine.
- Do not let anyone other than authorised personnel enter the work s te, especially children. Injuries might occur.

10) Do not use the machine with force.
- Use the machine only for its designated purpose. Operate according to the capacity of the main unit, to assure safe and effective operation. Forced operation may not only cause damage to the product but also accidents.
- Do not use the machine in the any way that could cause the mot r to lock, or cause smoke or fire.

11) Wear neat clothing.
- Do not wear neck ties, clothes with open sleeves, loose cl thing, accessories such as neckla es, etc., which could get caught in the rotating parts.
- When working outdoors, it is recommended that you wear rubber gloves and shoes with stoppers. Slippery gloves and shoes are liable to cause injuries.
- Cover long hair with caps or hair nets, to prevent them getting caught in rotating parts.
- Wear safety caps, safety shoes, etc. according to the work ng envir nment.

WARNING

12) D not w k in an unnatu al p sture.
- K eep a fir footing and balance to av id falling over and injuring yourself.

13) R emove tools such as wren hes.
- B ef re turning the switch ON, che k that t ols used f r inspection and adjustment have been removed.
  If y u use the machine when tools are left nside it, accidents and injuries may occur.

14) Operate the unit with g eat are.
- A lways work with great attention to handl ng the machine, working methods and surrounding conditions. Carelessness may result in accidents and injuries.
- D o not operate the machine when concentration is lowered such as when tired, after drinking alcohol, when sick, affected by medic nes, etc.

15) D not handle the power cord carelessly.
- D o not carry the product by the ord, or pull the plug out of the socket with the cord.
- D o not place the cord near heated objects, fats & o ls, cutte s and objects with sharp edges.
- T ake care not to tread on the ord, pull the cord or apply unnecessary force resulting in damage t the cord.
  E lectric shock or short-circuit may occu , causing fire.

16) Pe form careful maintenance da ly.
- W hen changing accessories and parts, follow the instruction manual.
- Peri dically inspect the powe supply cord and plug. If damaged, ask your sales agent or our sales division for repai s.
- I f an extension cord is used, inspect the o d periodically and, if damaged, replace it.
  If extension cords are used outd ors, use extension cords designed for outdoor use to prevent electric shock, sho t-circuit or fire.
- K eep parts used for gripping dry and clean, and free of o l and grease. Slipping may cause injury.

17) C heck for damaged parts.
- B ef re using the machine, carefully che k for damage to the protective cover and other parts, and che k both normal operation and specified functions.
- C he k for any abnormalities such as in adjustment of movable parts, tightening, damage to parts, and all parts affecting operation.
- D o not use machines if the stop and start switches do not work.
- I n replacing or repairing a broken protective cover and other parts, follow the operation manual.
  If n instructions are specified in the operation manual, ask your sales agent or our sales division for repairs.

18) St re carefully when the machine is not in use.
- S tore in a dry place away from children and locked with a key.

19) For overhaul and repair of the machine, ask an appointed R E X agent.
- O ur products comply with co responding safety standards. D o not remodel.
- B e sure to ask your sales agent or our sales division f r any repairs.
  If repairs are carried out by unskilled or unqualified pers nnel, the performance of the unit will be adversely affected and may result in accident or injury.

Instructions for Using the Machines

●Threading work

⚠ WARNING

① Take care when handling blades and other sharp objects.
- To prevent accidents and injury, take special care when handling blades and other sharp objects such as the dies, reamers,. pipe cutters and carbide cutters, etc.

② Do not place your hands or face close to rotating parts while the machine is operating.
- Inserting your hands into rotating parts and dies will result in serious accidents and injury.

③ Do not perform the next operation until the machine has stopped rotating completely.
- Rotation does not come to a complete standstill when you turn the switch OFF.
- Before starting the next job, check that rotating parts have stopped. Failure to do so may result in accidents and injury.

④ Do not wear gloves when operating the machine.
- A serious accident or injury may occur if gloves are caught in rotating parts or blades.

⑤ Do not leave the machine while it is still rotating.
- Others may be injured.

⑥ If the machine is accidentally dropped or hit, check carefully for damage such as cracks, broken parts, or deformation.

If any abnormalities are detected, ask your sales agent or our sales division for inspection and repair. Continuing to use the machine in such a state may result in malfunction, accidents or injury.

⑦ Do not touch the dies just after threading

The dies will be very hot just after completing threading. To avoid burns and other injuries, avoid touching them until they have cooled down.

⑧ Die head and dies.

Use the die head and dies that correspond to the diameter of the pipe to be threaded.
Mount the die head correctly on the carriage.
Before starting threading, set the die head to the threading position, turn the switch ON, and make sure the threading oil flows correctly from the die head and that the oil flows onto the dies. This will prevent not only incorrect threading of the pipe, but also malfunction of the machine, accidents and injury.

⑨ Make sure you start threading from the correct position.

Always start cutting threads with the carriage to the right of the red line on the front support bar or else the die head may hit the chuck, causing damage to the machine, accidents or injury.

⑩ Use a pipe support when threading long pipes.

When threading long pipes, use the special pipe support to prevent vibration from warping while the pipe is rotating.
The support will also prevent the machine from becoming unstable under the weight of the material.
Failure to use the pipe support may not only result in imperfect threads and malfunction of the machine, but may even lead to accidents and injury.

⑪ Be sure to attach accessories according to the Operation Manual.
- If accessories and attachments are not fitted correctly, such parts may drop off during operation or the unit may fall over resulting in accidents and injury.

Instructions for Using the Machines

●Using threading oil for stainless steel pipes

⚠ WARNING

① Do not burn off the oil.
- This oil contains chlorine compounds and generates toxic gas when burnt.
- In the case of an emergency in which someone has inhaled such toxic gases, carry the affected person out into the fresh air and seek medical attention.

② Disposal of waste oil and cans.
- The disposal of waste materials is governed by local laws and regulations. Follow all laws related to the disposal and cleaning of waste materials.

⚠ CAUTION

① Wear goggles
- Touching the eyes with oil may cause inflammation.
- Emergency treatment : Wash eyes with clean water for about 15 minutes and seek medical attention.

② Wear protective gloves.
- If oil comes into contact with the skin, it may cause inflammation.
- Emergency treatment : Carefully wash the affected part with soap and water.

③ Take care not to breathe in oil mist or steam.
- Breathing in oil mist or steam may cause nausea.
  Emergency treatment : Carry the person out into the fresh air, cover them with a blanket, keep them warm and relaxed, and seek medical attention.

④ Do not drink the oil
- Drinking the oil may cause diarrhea or vomiting
  Emergency treatment : Seek medical attention immediately, without forcing the person to vomit.

⑤ Do not place the oil where it is easily reached by small children.

⑥ Do not thin the oil or mix it with threading oil produced by other companies.
If the threading oil gets contaminated with water during the threading operation and the oil changes to a milky white, or the quality of the oil deteriorates significantly resulting in a poor finish to the thread, replace the oil immediately.

⑦ Be particularly careful about the risk of fire. Depending on the country of use, the oil may be classified as a hazardous material. To prevent fire or explosions, always familiarise yourself with and comply with local laws and regulations pertaining to the handling of such materials.

⑧ Storage
- Always close the lid after use to prevent the oil from being contaminated by dust, water or other foreign bodies.
- Store in a dark place away from direct sunlight.

Instructions for Using the Machines

● Reaming

⚠ WARNING

① To prevent injury, do not touch the reamer blade directly with your hands as it is extremely sharp.

● When using threading oil for water supply pipes and water-immiscible cutting oil for threading

⚠ CAUTION

① Wear goggles
- Touching the eyes with oil may cause inflammation.
  Emergency treatment : Wash eyes with clean water for about 15 minutes and seek medical attention.

② Wear protective gloves.
- If oil comes into contact with the skin, it may cause inflammation.
  Emergency treatment : Carefully wash the affected part with soap and water.

③ Take care not to breathe in oil mist or steam.
- Breathing in oil mist or steam may cause nausea.
  Emergency treatment : Carry the person out into the fresh air, cover them with a blanket, keep them warm and relaxed, and seek medical attention.

④ Do not thin the oil or mix it with threading oil produced by other companies.

⑤ If the threading oil gets contaminated with water during the threading operation and the oil changes to a milky white, or the quality of the oil deteriorates significantly resulting in a poor finish to the thread, replace the oil immediately.

⑥ Do not drink the oil
- Drinking the oil may cause diarrhea or vomiting
  Emergency treatment : Seek medical attention immediately, without forcing the person to vomit.

⑦ Do not place the oil where it is easily reached by small children.

⑧ Be particularly careful about the risk of fire. Depending on the country of use, the oil may be classified as a hazardous material. To prevent fire or explosions, always familiarise yourself with and comply with local laws and regulations pertaining to the handling of such materials.

⑨ Storage
- Always close the lid after use to prevent the oil from being contaminated by dust, water or other foreign bodies.
- Store in a dark place away from direct sunlight.

⑩ Handling waste oil and oil cans
- The handling of waste oil and oil cans is governed by local laws and regulations. Always comply with the laws and regulations governing methods of disposal and cleaning.

⑪ Precautions with oil drums (200L)
- Do not apply pressure to empty oil drums or they may burst.
- Never attempt to weld, heat, make holes in or cut the drums, as this could possibly lead to explosion or fire from any residue left in the drum.

Supplied Items & Main Parts

Supplied Items

The main unit plus safety devices; three-stage safety foot switch, including NOT/AUS function (EMERGENCY/STOP); Self-opening automatic die head (AV, AIII machine) or Manual die head (A machine); 2 sets of dies (R50A series, P50AV) or 3 sets of dies (S80A series); pipe cutter; reamer; tool kit.
*Thread cutting machines must be connected to the main power supply only via a 30 mA fault current breaker if installed on construction sites, open-air work places and similar locations.

Main Parts

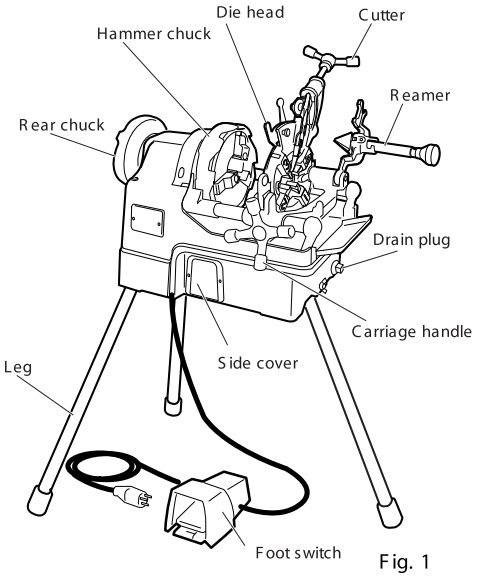

Fig. 1

R50AV (Uni-autoV R-type)
R50A (Manual-open)

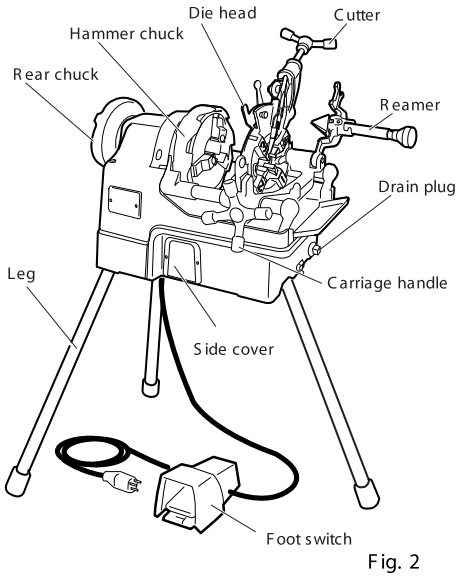

Fig. 2

P50AV (Uni-autoV P-type)

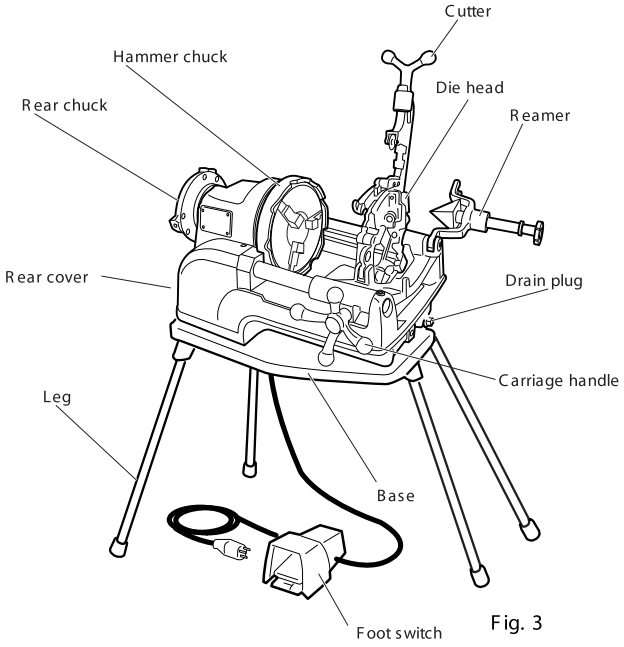

Fig. 3

S80AV (Uni-autoV P-type)
S80AIII (Self-opening)
S80A (Manual-open)

Specifications & Standard Accessories

R50AV, R50A

■ Specifications

Threading capacity:	1/2-2"(threading, cutting, reaming)
Voltage:	110V, 230V, models available
Motor:	Single phase 600W series motor
Rotation speed:	40 r.p.m. (without load)
Net weight:	104 lbs (47kg)
Dimensions:	630(L) x 380(W) x 390(H)mm
R50A:	Surface sound pressure level Lpf=86dB(A)
	101g(S/1m^2)=13dB(A)
	Sound power Lw=99dB(A)

■ Standard Accessories

R50AV die head:	Uni-auto V R-type (1/2-2") one
R50A die head:	Manual-open (1/2-2") one
Dies (BSPT or NPT):	(1/2-3/4")(1-2") one set each
Thread cutting oil:	1 can (2 liters)
Stand:	3 legs
Machine cover:	1
Tool box:	1

Hexagonal keys:	2.5, 3, 4, 5, 6 mm, one each	Bearing oil:	1 (with oiler)
Screwdriver:	Cross and minus point, one each	Carbon brushes:	1 set (with auto-stop)
Single head wrench:	1 (13mm)	Cutter wheel:	1

P50AV

■ Specifications

Threading capacity:	1/2-2"(threading, cutting, reaming)
Voltage:	110V, 230V, models available
Motor:	Single phase 600W series motor
Rotation speed:	40 r.p.m. (without load)
Net weight:	104 lbs (47kg)
Dimensions:	630(L) x 380(W) x 390(H)mm
P50A:	Surface sound pressure level Lpf=86dB(A)
	101g(S/1m^2)=13dB(A)
	Sound power Lw=99dB(A)

■ Standard Accessories

P50AV die head:	Uni-auto V P-type (1/2-2") one
Dies (BSPT or NPT):	(1/2-3/4")(1-2") one set each
Thread cutting oil:	1 can (2 liters)
Stand:	3 legs
Machine cover:	1
Tool box:	1

Hexagonal keys:	2.5, 3, 4, 5, 6 mm, one each	Bearing oil:	1 (with oiler)
Screwdriver:	Cross and minus point, one each	Carbon brushes:	1 set (with auto-stop)
Single head wrench:	1 (13mm)	Cutter wheel:	1

S80AV, S80AIII, S80A

■ Specifications

Threading capacity:	1/2-3"(threading, cutting, reaming)
Voltage:	110V, 230V models available
Motor:	Single phase 700W series motor
Rotation speed:	33 r.p.m. (without load)
Net weight:	139 lbs (63kg)
Dimensions:	770(L) x 480(W) x 405(H)mm
S80A:	Surface sound pressure level Lpf=86dB(A)
	101g(S/1m^2)=13dB(A)
	Sound power Lw=99dB(A)

■ Standard Accessories

S80AV die head:	Uni-auto V P-type (1/2-2") Manual open(2 1/2-3") one each
S80AVIII die head:	Uni-auto V P-type (1/2-2") Self-opening(2 1/2-3") one each
S80AIII die head:	Self-opening(1/2-3/4")(1-2")(2 1/2-3") one each
S80A die head:	Manual-open(1/2-2")(2 1/2-3") one each
Dies (BSPT or NPT):	(1/2-3/4")(1-2")(2 1/2-3") one set each
Thread cutting oil:	1 can (4 liters)
Base and stand:	1 set, 4 legs
Machine cover:	1
Tool box:	1

Hexagonal keys:	3, 4, 5, 6 mm, one each	Carbon brushes:	1 set (with auto-stop)
Screwdriver:	Cross and minus point, one each	Cutter wheel:	1
Single head wrench:	1 (13mm)		
Bearing oil:	1 (with oiler)		

Warranty

REX is committed to the manufacture of high-quality machines and related accessories that have undergone rigorous testing from design to shipment. Thread cutting machines purchased from REX or its appointed agents are covered by a warranty for the lifetime of the machine that assumes its correct and responsible use. Within the terms of the warranty, REX's liability for repair or replacement is limited to defects that are proven to be the result of faulty materials or workmanship. The warranty does not apply to expendable parts or materials, such as dies, carbon brushes, etc., except where defects have occurred during the manufacturing process. Also excluded from the warranty are all defects caused by normal wear and tear, incorrect use, failure to comply with the operating instructions in this manual, operating the machine with excessive load, using inappropriate materials for which the machines were not designed, and any other reason for which REX cannot be held responsible.
The warranty will be deemed null and void if the machine has been tampered with, or repairs have been attempted by a third party such as an agent that is not approved by REX. All repairs must be performed by a REX-appointed agent that has been authorized to perform such repairs.
Claims will only be accepted if the machine is returned to REX or its appointed agents in an assembled state without prior repairs having been performed. All charges incurred in forwarding and returning the machine will be the responsibility of the user.
The warranty applies only to the original purchaser, who must provide proof of purchase by submission of the original invoice or sales slip.

Operating Instructions

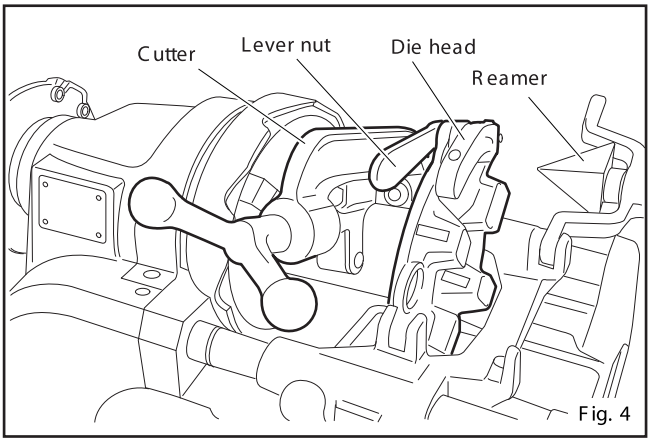

Fig. 4

Transportation

It is not necessary to drain off the oil during transportation.

1. Insert a short pipe and close the chuck firmly.
   Caution:
   Make sure the length of the pipe is short enough to allow the die head to be lowered into position for transportation.
2. Manual-open die head and uni-auto die head:
   Release the lever nut, open the dies as far as they will go and then replace the setting lever on the corresponding pin.
   Self-opening die head:
   Set the cutting end of the pipe firmly in the chuck, remove the die head size setting lever from the pin and pull the cam-plate forward to fully open the dies.
3. Lock the reamer arm in the reaming position.
4. Lower the pipe cutter; turn the carriage handle clockwise to advance towards the chuck.
5. Turn the cutter handle, and secure the roller and pipe.
   The machine should then be secure during transportation.

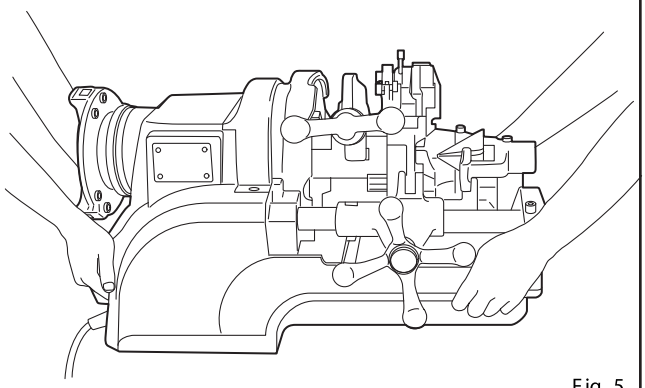

Fig. 5

Machine set-up

The machine can be placed on any work bench. Just fill the tank located under the scrap receiver with enough thread cutting oil. Now the machine is operational.

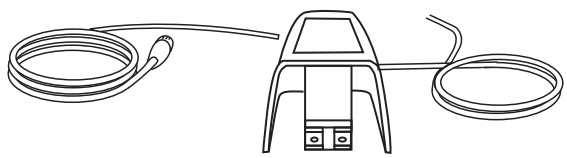

Foot switch

Fig. 6

Safe Operation

In compliance with EU safety regulations, this machine is equipped with a run-on limiter (after run) and a three-stage safety foot switch with NOT/AUS function (EMERGENCY/STOP). The foot switch has three positions:

UP=OFF, CENTER=ON, DOWN=EMERGENCY/STOP

If the switch is vigorously pushed all the way down to the position NOT/AUS, the switch will automatically lock and the power supply will be interrupted immediately to stop the machine. To turn on the machine again, to push the button on the side of the foot switch housing.

Caution:

The machines are designed for cutting, threading and reaming of pipes, as well as for tapping solid work pieces. Thread sealing and the mounting/removing of pipe fittings are not permissible.

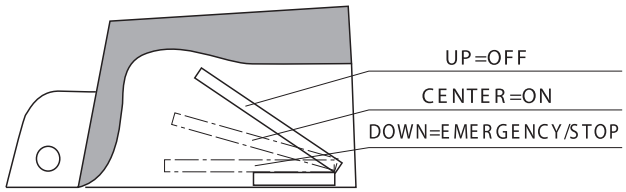

Push button

Fig. 7

The power socket must be located near the equipment and must be easily accessible.

If the danger zone formed by the machine and the rotating work piece does not allow a clear and unobstructed view, the rotating work piece must be covered or encased over its full length, or the danger area must be roped off or secured by guardmen. Protection devices must be positioned and/or attached securely. If supports are used for this purpose, they must be stable, height-adjustable and set up in sufficient quantity.
Operators and helpers must wear close-fitting clothes.
Gloves must be removed before the machine is switched ON; this also applies to neckties, jewellery, wrist watches and similar objects. It is dangerous to work on power-driven thread cutting machines with long, dangling hair.

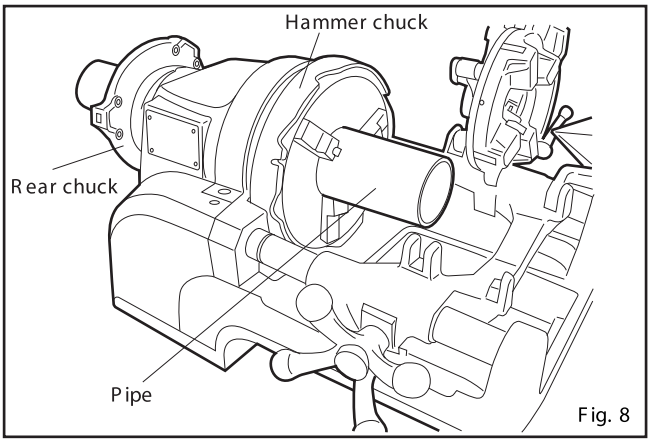

Fig. 8

Handling of the Unit

Insert the workpiece into the self-centering and clamping chuck in such a way that the piece protrudes about 15 cm from the hammer chuck. After centering the pipe, it is clamped with the hand-operated chuck. Make sure that all three chuck jaw inserts are holding the pipe evenly. Then reverse the hand wheel by about half a turn and knock it towards the holding position.

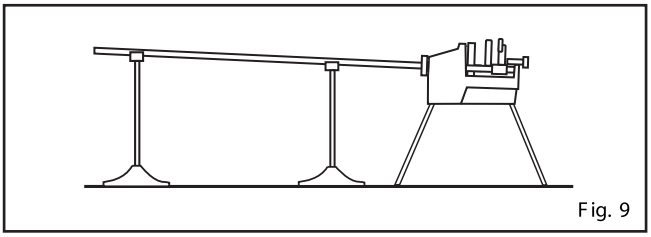
Fig. 9

Caution:
Long pipe must be stabilized by one or two pipe supports.
Make sure that the pipe is set on the supports in such a way that the workpiece is adjusted to the height of the machine.
It is recommended to use a REX pipe support, which is equipped with four ball casters; this enables an easy longitudinal and rotational movement of the pipes, thereby avoiding the possibility of the support tipping over.
Make sure that the chuck jaw inserts are always clean and free of metal chips. Clean the chuck jaw inserts periodically.

Power Supply

Plug the machine into a power supply that matches its specifications. If the cabtyre cord included with the unit is too short to reach the socket, connect a short, thick cord to the machine with a large electrical capacity. If a long, thin cord is used to connect the unit to the power source, the machine may sometimes stop operating.

⚠ WARNING

Make sure the unit is grounded properly before attempting to use it. Failure to do so may result in electric shock. When using a grounded socket, remove the grounding adapter before plugging the unit into the socket.

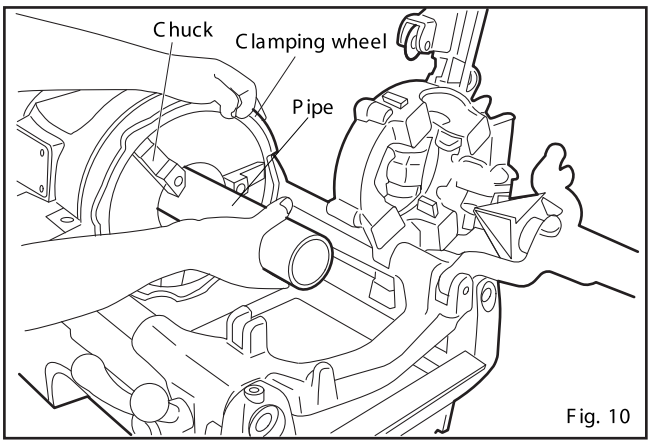

Fig. 10

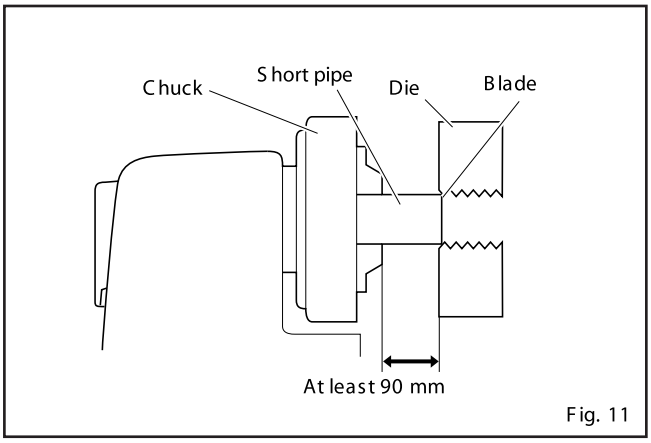

Fig. 11

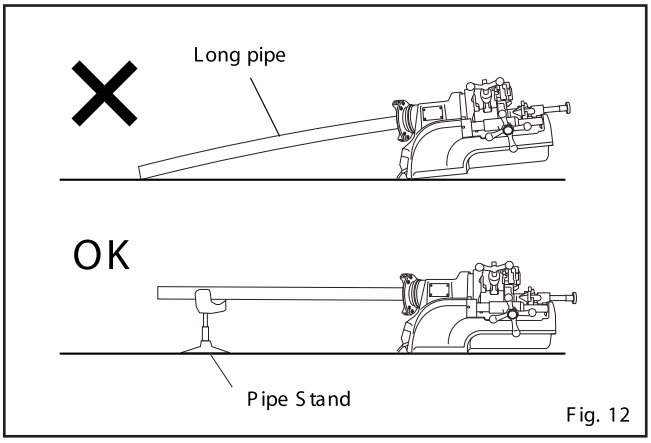

Fig. 12

Inserting and Removing Pipes (Fig. 10)

⚠ WARNING

During operation and immediately after the switch has been set to the OFF position, when the machine is still rotating, do NOT attempt to insert or remove pipes. This could result in an accident or serious injury if you or your clothing should become caught in the machinery. Before inserting or removing pipes, check to make sure that the machine has stopped moving completely, and remove the power plug from the outlet. Accidents or injuries may result if the unit should begin operating unexpectedly.

(1) Open the scroll and chuck to a position wider than the pipe diameter, then insert the pipe from the rear scroll end. (If the pipe is short, insert it from the chuck end.)
(2) Close the scroll and then, supporting the pipe with your right hand, close the chuck gently with your left hand and align the tip against the pipe. Then fasten the pipe securely in place.
(3) To remove the pipe, turn the clamping wheel in the opposite direction to loosen the chuck. Then loosen the scroll and remove the pipe.

■ Attaching Short Pipes for Thread Cutting (Fig. 11)

Clamp the pipe lightly with the chuck and, using the blade of the die, support the end where threads will be cut. Then, once again pull the hammer chuck towards you to fasten the pipe tightly in place. This will ensure that the pipe does not vibrate and threads are cut smoothly. However, be sure to fasten the pipe with the chuck no closer than 90 mm to the die end of the chuck.

■ Attaching Long Pipes (Fig.12)

When cutting threads on long pipes, use a pipe support to ensure that the pipe does not vibrate due to warping as it rotates, and further to ensure that the machine does not become unstable due to the weight of the pipe.

⚠ WARNING

Failure to use a pipe support may make proper threading impossible and may result in damage to the equipment, accident or injury.

Thread cutting using the Uni-auto V Die Head (R50AV, P50AV, S80AV)

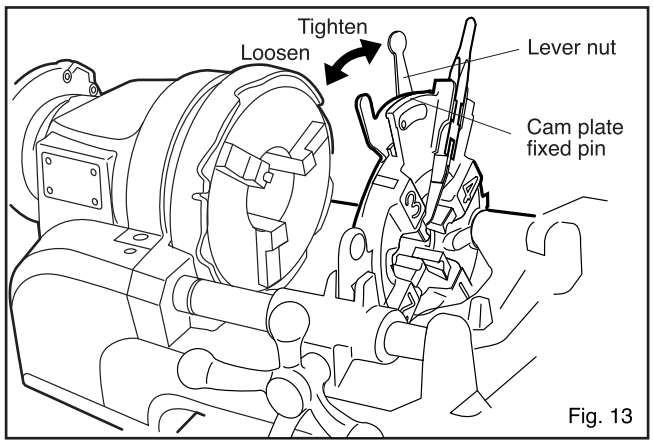

Fig. 13

Set the desired pipe dimension on the die head. To do this, the lever nut must be released. The cam plate fixed pin can then be set to the desired position.

⚠CAUTION

Start the thread cutting process with the carriage to the right of the red line on the front support bar.

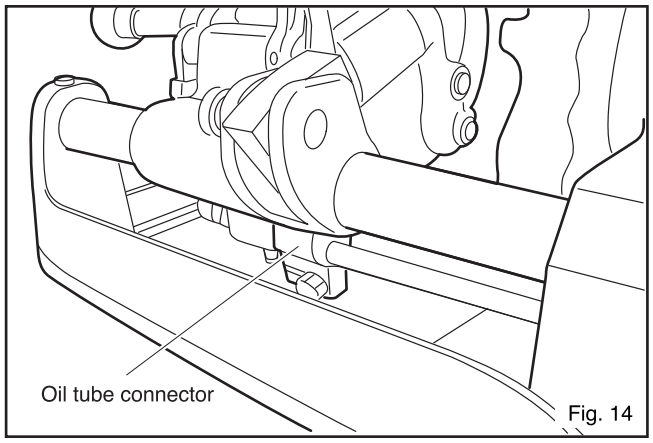

Fig. 14

Turn on the machine with the foot switch. The thread cutting oil now automatically flows through the die head on the pipe. The volume of oil can be regulated by using the thumb screw on the relief valve.

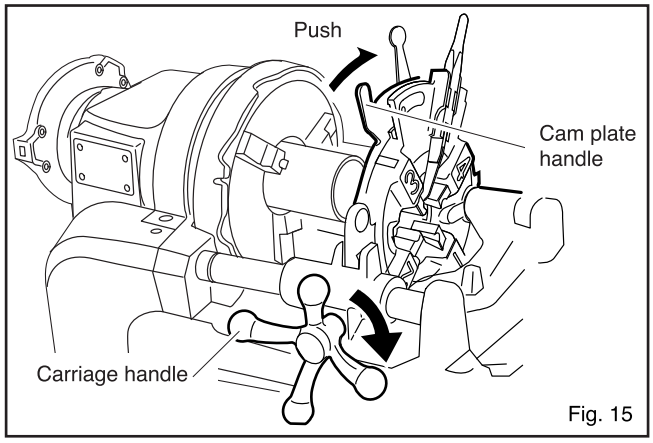

Fig. 15

Now push the die head against the pipe by turning the carriage handle clockwise. Make sure that all three chuck jaw inserts are holding the pipe evenly and that the pipe moves parallel to the die head. After the first few threads have been cut, the die head continues cut-ting threads automatically. Once the set thread length is reached, the die head will open and stop cut-ting threads automatically.

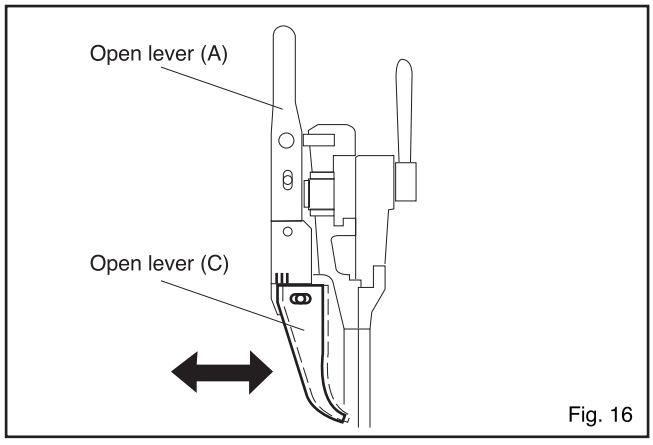

Fig. 16

The stop lever (Open lever C) is equipped with an elon-gated hole, which allows precise setting of the re-quired thread length. If you are planning to cut long threads or bolts, this stop lever (Open lever C) must be removed. While the machine is still running, the die head can be opened by pushing the release lever (Open lever A).

Uni-auto V Die Head

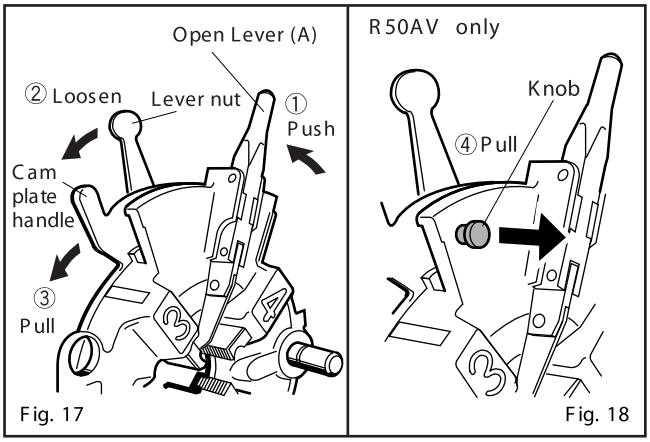

Fig. 17 Fig. 18

■ Changing the Dies

Lift the die head off the carriage and put it on a table.
Push the release lever (Open lever A) to open the die head.
Now loosen the lever nut by about one or two turns. The cam plate handle can now be moved beyond the maximum position.
The dies can now be pulled out of the housing.

In the case of the R50AV (Uni-auto V R-type Die Head) use the same procedure as with other machines, pull the cam plate handle forward, then pull out the knob on the front of the die head (Fig. 18), pull the cam plate handle a little further forward and remove the dies.

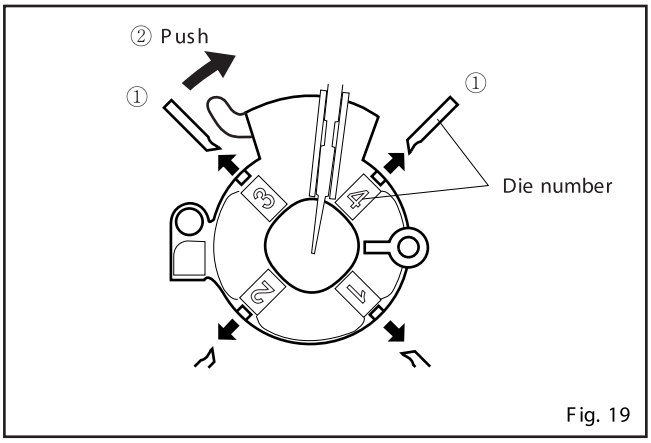

Fig. 19

⚠CAUTION

Start the thread cutting process with the carriage to the right of the red line on the front support bar.

When inserting the new dies, make sure that the number on the dies corresponds to the number on the die head. Each of the dies is provided with a cross marker: slide the dies into the housing until these markings are still visible from the outside.

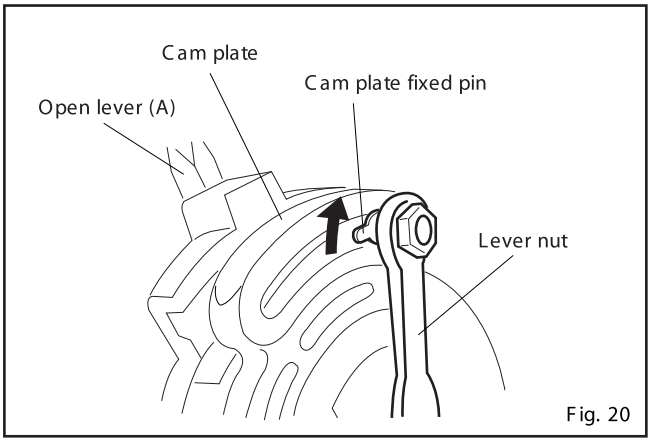

Fig. 20

In this position, the dies will click audibly into place.
Slide the cam plate fixed pin to the desired thread size mark. Secure this setting by tightening the lever nut.
We recommend using an additional die head, in order to avoid having to replace the dies when cutting threads of $^1/_2$-$^3/_4$", then changing to 1-1$^1/_2$"(2") or vice versa.

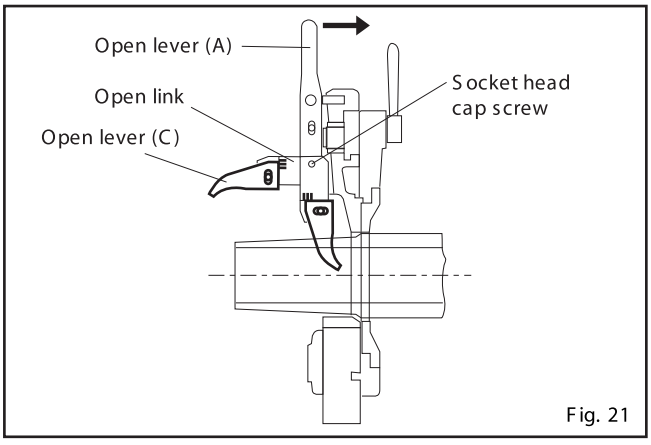

Fig. 21

■ Making Threads of Non-standard Length

A device for manual threading is attached to enable threads of non-standard length to be made.
For manual operation, loosen the socket head cap screw on the open link.
Next, raise Open lever (C) 90 .
Then retighten the socket head cap screw.
Finally, select the desired position for threading, press Open lever (A) in the direction of the arrow and complete threading.

Thread cutting using the Self-opening Die Head (S80A)

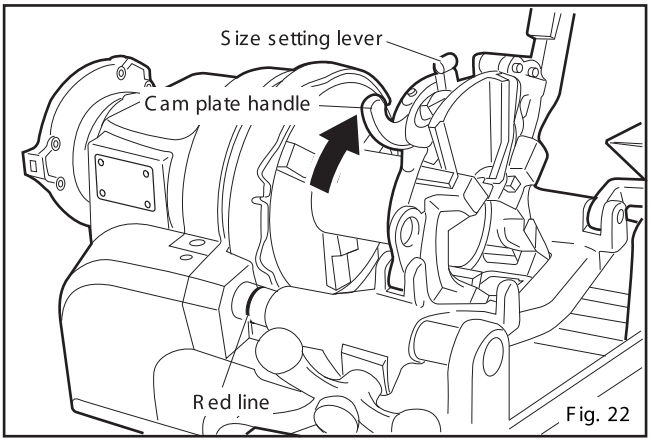

Fig. 22

Be sure to start threading with the carriage right of (before) the red line on the front support bar.

1. Push the die head handle forward to set the open lever then set the thread size by fitting the size setting lever to the desired position.
2. Switch on the machine and thread cutting oil will automatically flow out from the die head.

⚠ CAUTION

Start the thread cutting process with the carriage to the right of the red line on the front support bar.

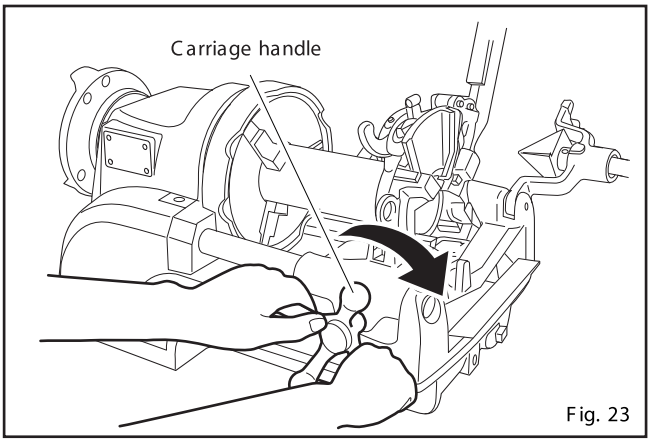

Fig. 23

3. Turn the carriage handle to the right to advance the die head until the first two or three threads are cut. The rest is automatic.
4. The dies will automatically open when a perfect taper thread has been cut.

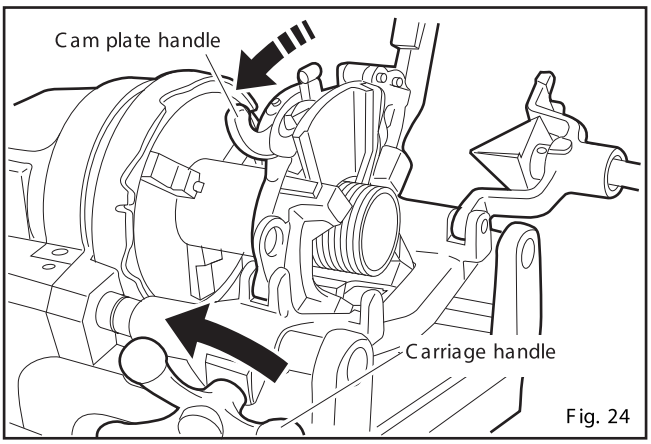

Fig. 24

5. Turn the carriage handle to the left to clear the pipe.
6. Push the cam plate handle forward once again to set the automatic release. Reset the size if the next pipe is of a different diameter.

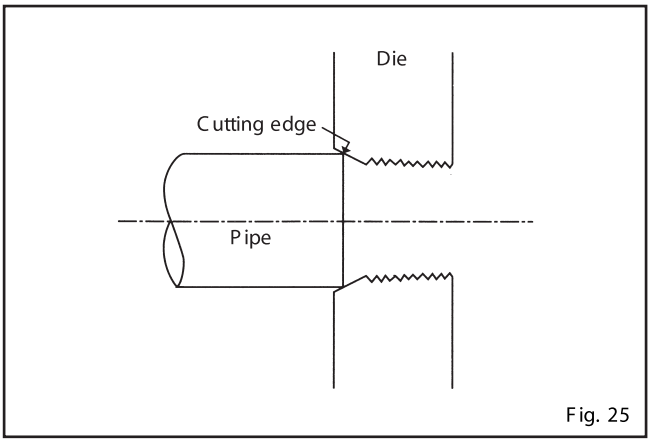

Fig. 25

■ Precautions for Threading

1. As the dies come into contact with the pipe, the carriage handle should be turned with gradually increasing strength until the dies engage the pipe firmly. After the dies fully engage the pipe, they will travel smoothly by themselves, but optimum cutting will be assured if the carriage handle is turned with slight pressure to keep pace with die movement.
2. Be sure to start threading with the carriage right of (before) the red line on the front support bar. If threading starts left of (behind) the red line, the die head can strike the chuck and damage the machine. The red line must be visible before starting thread cutting.

Self-opening Die Head

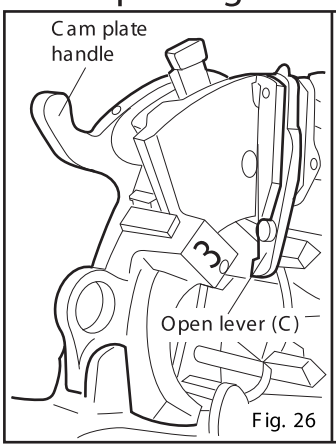

Fig. 26

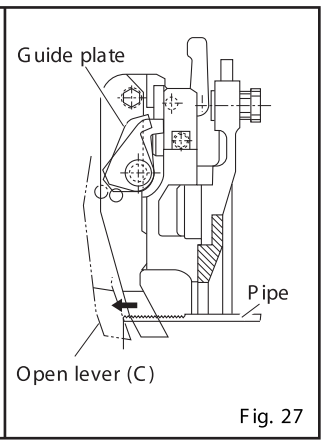

Fig. 27

■ Self-opening Die Head

When the cam plate handle is pushed forward and set in position, the open lever slips into position in its groove. As the dies travel along the pipe, the end of the pipe comes into contact with and pushes the lever out of its groove to release the dies.

⚠ CAUTION

Start the thread cutting process with the carriage to the right of the red line on the front support bar.

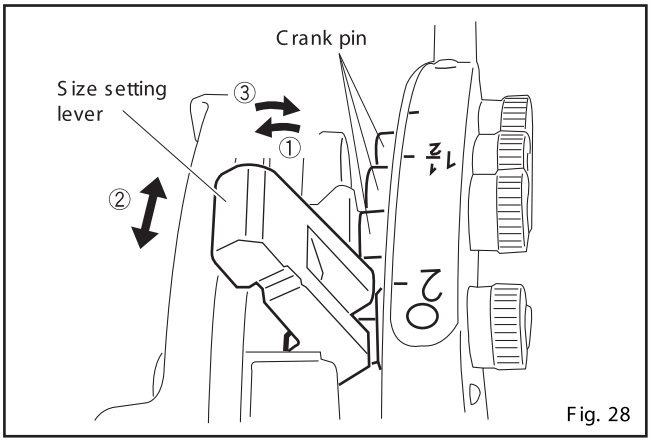

Fig. 28

■ Change of Size

Size change is simple with the size setting lever.
Set the thread size by fitting the size setting lever to the desired position.

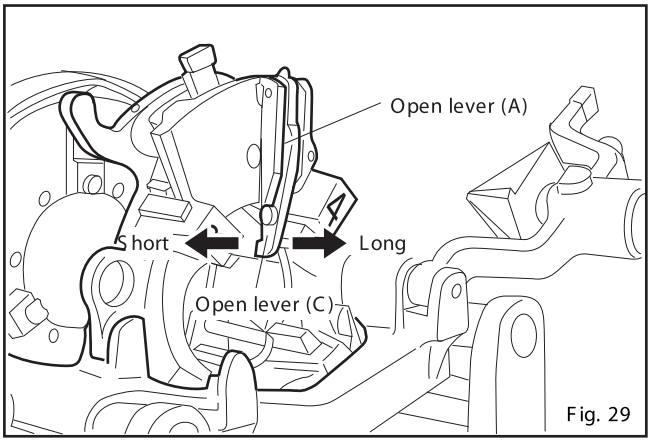

Fig. 29

■ Adjusting Thread Length

1. Loosen the socket head cap screw on Open lever (C).
2. Move Open lever (C) to the right for longer threads or to the left for shorter threads as indicated by the arrows.
3. Retighten the socket head cap screw.

Adjustable capacity 1 - 3"(1 thread)
$^1/_2$-$^3/_4$"(1.3 threads)

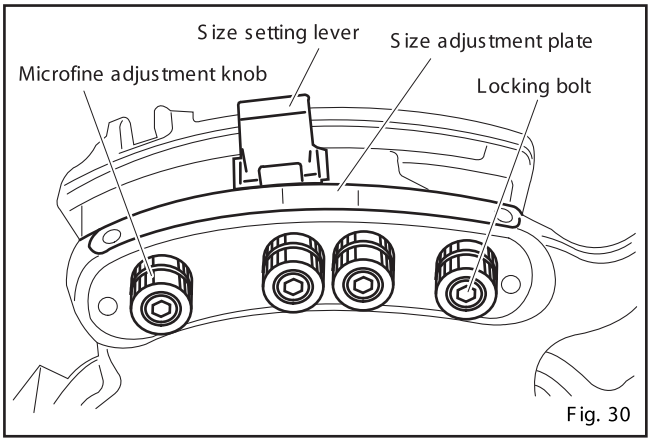

Fig. 30

■ Microfine Adjustment of Thread Thick-

Microfine adjustment of thread thickness is possible to allow pipes to be cut exactly to your own requirements.
Simply turn the microfine adjustment knob to the left to decrease, and to the right to increase the thread thickness.
The knob is locked by a locking bolt, which should be loosened with the hexagonal key provided and the knob turned three settings to the right before adjustments are made.

Adjustable capacity 1 - 3"(1.5 threads)
$^1/_2$-$^3/_4$"(2 threads)

Note:
Size should always be checked with a thread gauge after adjustment.

Self-opening Die Head

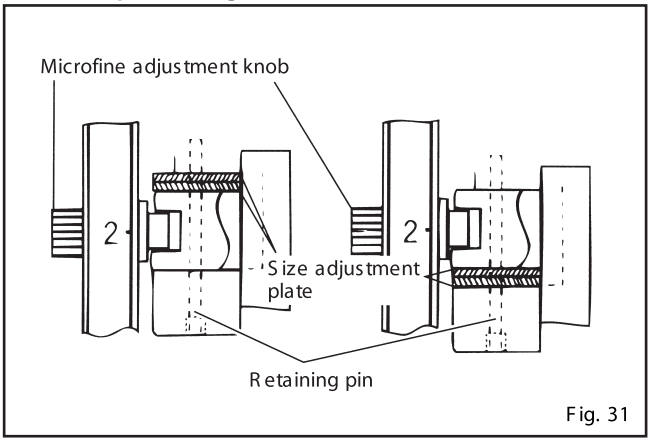

Fig. 31

■ Size Adjustment Plate

If, even with full adjustment, thread size is not satisfactory, remove the retaining pin and reinsert the size adjustment plates.
Hold in place with the retaining pin.

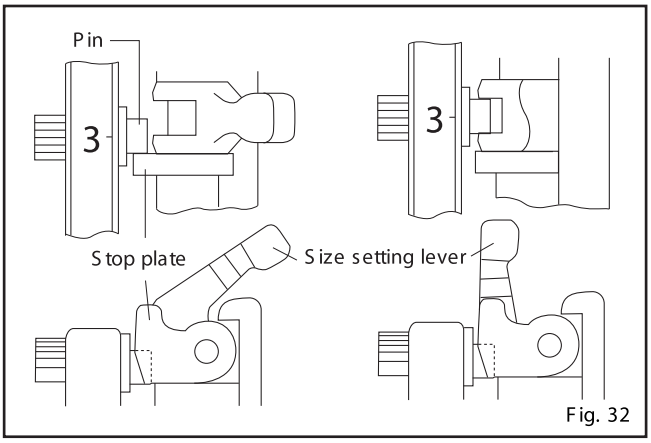

Fig. 32

■ Double Cutting with 3" Die Head

The 3" die head is used in the same way as for other sizes but if the voltage is low, double cutting may sometimes be necessary. After locking the die head in the usual way, the size setting lever should be opened and the double cutting lever lowered instead. After cutting the thread once, the die head should be reset, and the size setting lever put into position for the second cut.

Self-opening Die Head

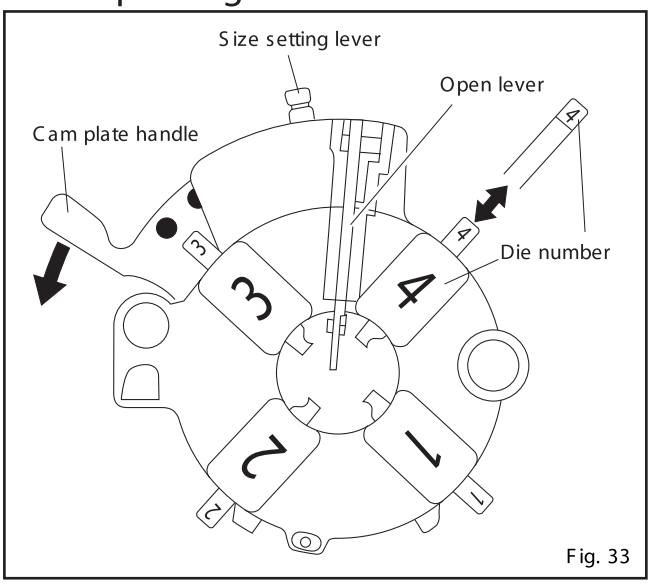

Fig. 33

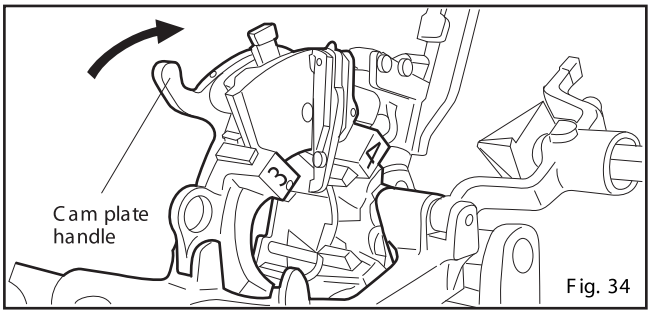

Fig. 34

■ Changing the dies

(Note: There is no need to remove the die head from the machine.)

Removal of the Dies:

1. After opening the die head (i.e. with the open lever removed from the groove on the block and the dies in the open position) remove the size setting lever from the size setting pin.
2. Turn the cam plate handle in the direction of the arrow.
   Dies No.3 and No.4 can be then be removed.
3. Raise the die head and remove dies No.1 and No.2.

Replacing the Dies:

1. Raise the die head and insert the replacement No.1 and No.2 dies until the notch is engaged. Ensure that the number on the dies corresponds to the number on the die head; if dies are inserted incorrectly, cutting will be impaired.
2. Lower the die head and replace dies No.3 and No.4 in the same way.
3. Turn the cam plate handle back in the direction of the arrow. The dies will then automatically fall into place for cutting. If the dies do not move into position properly, move them up and down a little and try again.
   Caution:
   Dies are made as a matched set of four, so be sure to use them as such and replace them all at the same time. Do not attempt to replace just one or two of the set as cutting will be adversely affected.

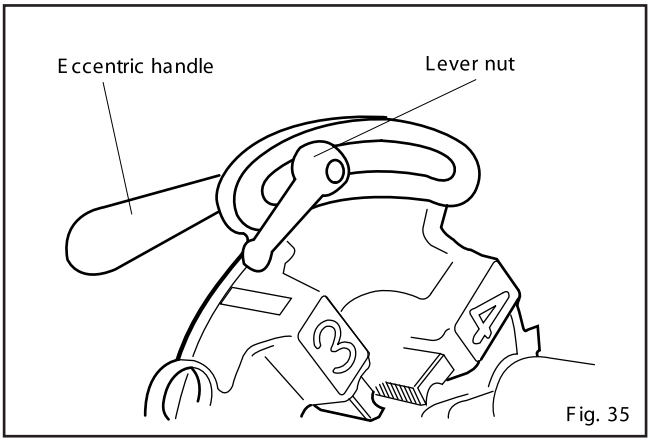

Fig. 35

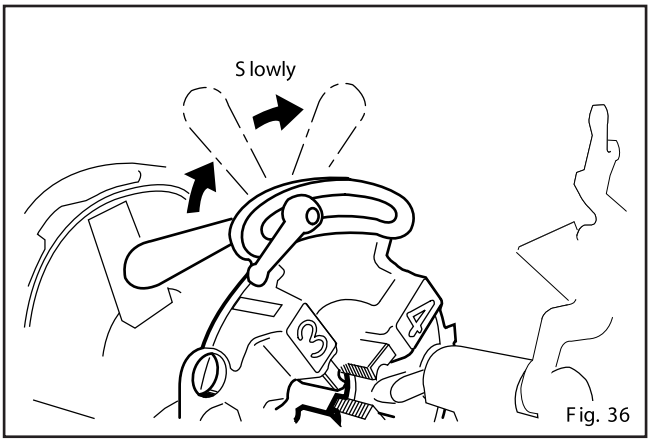

Fig. 36

Thread cutting using the Manual-open Die Head (R50A, S80A)

■ Threading Instructions

1. Install the correct set of dies in the die head and fit the die head on the carriage.
2. Loosen the lever nut and set the index line to the desired thread size.
   Refasten the lever nut to lock in position.
3. When the die head is securely engaged, press the switch to start after setting the pipe.
4. Be sure the pipe is rotating forward. Turn the carriage handle clockwise to advance the die head towards the pipe. Be sure oil is flowing from the die head before starting to thread. (See oil flow adjustment knob.)

⚠ CAUTION

Start the thread cutting process with the carriage to the right of the red line on the front support bar.

5. Apply clockwise pressure on the carriage handle until the dies engage the pipe to a distance of three or four threads.
   From this point the carriage handle may be released.
   A standard taper thread will be cut. If the dies are opened too rapidly, a stepped edge may appear on the thread, so be sure to open the eccentric handle slowly and smoothly. Then move the handle in the direction of the arrow.
6. When threading is complete, switch off and move the carriage out of the way to the right. Then raise the die head to the rest position. This action will automatically stop the oil flowing.

■ Points to Watch During Threading

1. Before adjusting the size of the thread to be cut, bring the eccentric handle towards you, until it is in the position indicated.
2. It is sufficient to lightly tighten the lever nut by hand.
3. Adjustment of the thread size can be simply made with the lever nut. Move it towards you to increase, and away to decrease the thread size.

Manual-open Die Head

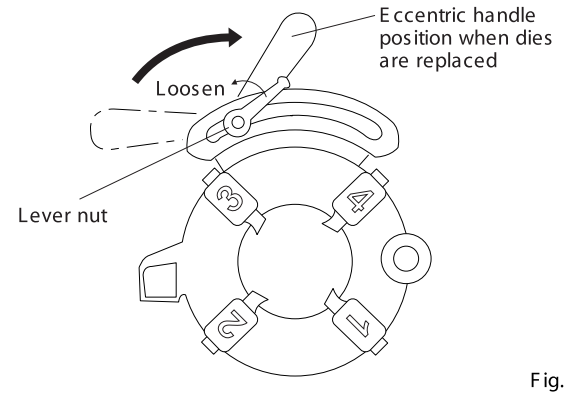

Fig. 37

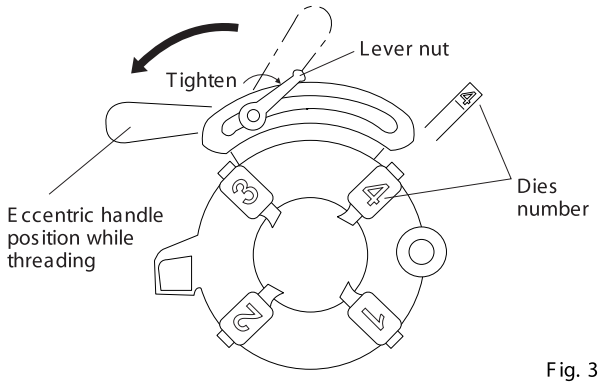

Fig. 38

■ Changing the Dies

1. Remove the die head from the carriage with the eccentric handle in the threading position, loosen the lever nut and push the handle over to the far left. In this position, all the dies are easily removable.
2. Dies are made in a set of four; be sure to replace and use them together as a set.
3. Replace the dies in order, and check that the handle moves freely. If not, one or more of the dies are incorrectly positioned, and they should be reinserted one by one.
4. Be sure that the numbers on the individual dies match the numbers on the slots in the die head or the pipe will not be threaded properly.
   After replacing the dies properly, set the die head in position on the carriage. Select the size of thread to be cut, then start threading.

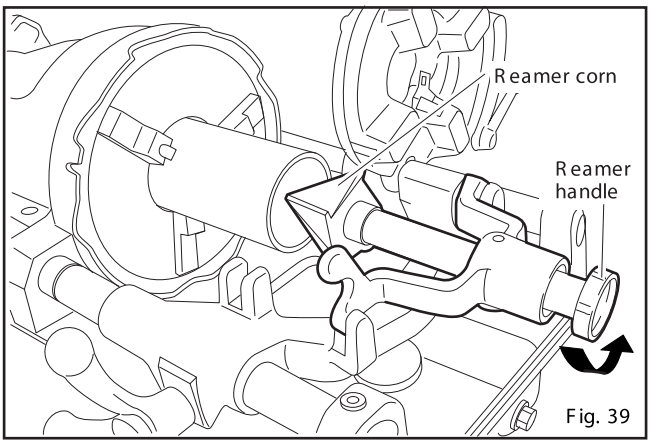

Fig. 39

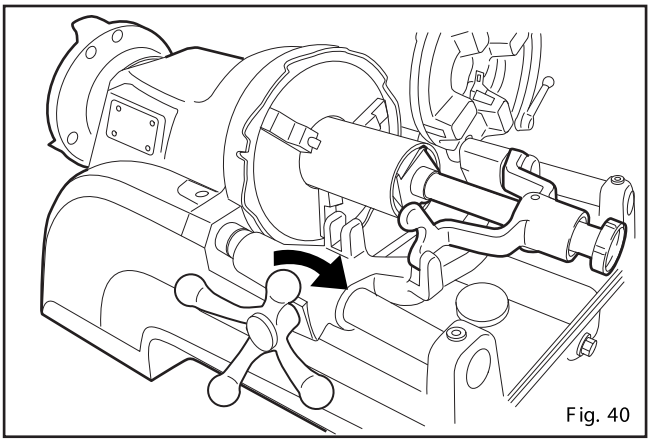
Fig. 40

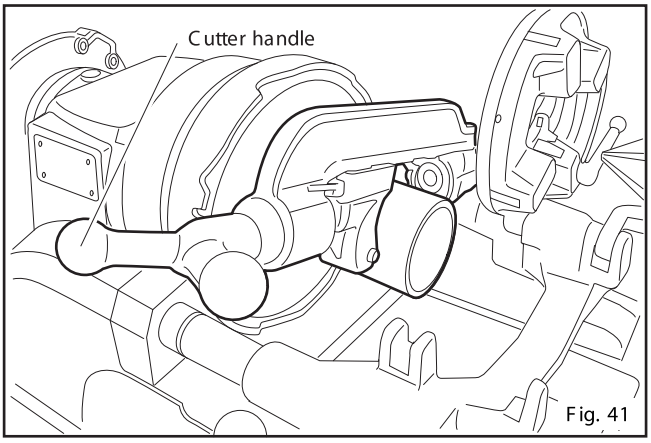

Fig. 41

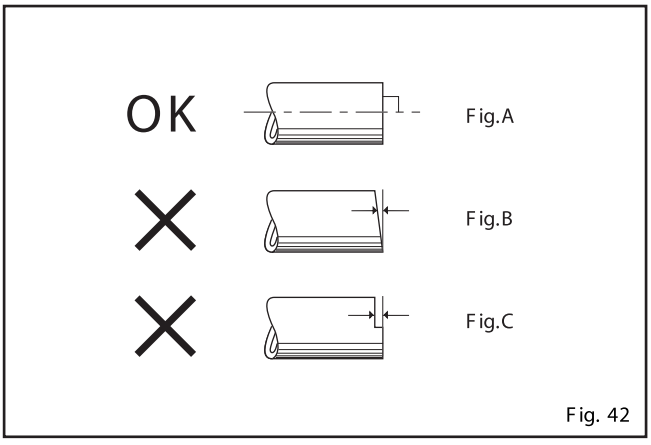

Fig. 42

■ Reaming

Lower the reamer into its working position, then push the carriage to the left by turning the carriage handle clockwise, until the pipe has been reamed cleanly. Make sure to apply pressure evenly without any jerky movements.

■ Pipe Cutting

Tilt the pipe cutter to its working position, then move the carriage to the position where the pipe should be cut. To perform cutting, turn the cutter handle counterclockwise against the pipe. Never cut into a thread, since this may damage the cutting wheel. Use common sense when cutting; do not apply too much pressure.

Warning:

If the cutter handle is turned too violently, when the cutter wheel cuts into pipe, it can distort the shape of the

■ Special Cut Grinder Precautions

We strongly recommend that only the pipe cutter attached to the machine be used to cut pipes that are to be threaded.

If a grinder is used, make sure that the cut face is square and without steps.

⚠ CAUTION

Make sure the cutter is placed in the proper position before turning the pipe. If the cutter is improperly positioned, the pipe may suffer harmful scratches or the cutter may be damaged.

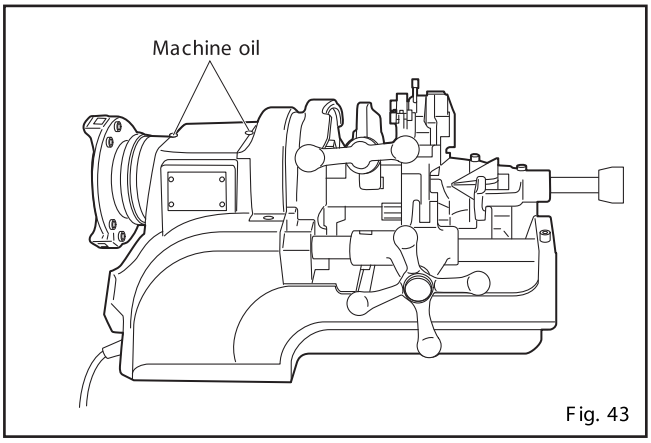

Fig. 43

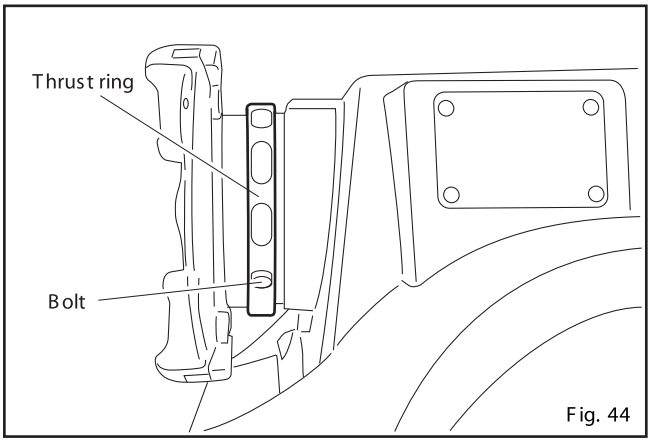

Fig. 44

■ Maintenance and Care

a) Both spindle bearings must be oiled prior to each working session by applying oil to both oiling nipples, using SAE30 machine oil.

b) The carriage and carriage support bars, hammer chuck, die head and all moving parts as well as the automatic die heads or manual open die heads must be kept clean; lubricate these parts periodically with machine oil. This is especially important if mineral oil-free, synthetic cutting fluids are used.

c) To ensure perfect threads and maximize the working life of the dies, replace the thread cutting oil periodically. If the contact pressure of the die head becomes too high, the dies are dull. Have the dies resharpened as soon as possible or replace them with new dies.

d) Self-adjusting Thrust Ring
Automatically absorbs rattle due to wear in the thrust direction of the main shaft, for more stable thread cutting.

⚠ WARNING

1. Always use the recommended type of carbon brushes.
   · The brake may fail to operate if other carbon brushes are used.
2. Store the unit where it will not be subjected to excessive humidity.
   · Storing the unit in a humid location for long periods of time may cause an oxide film to form on the motor and prevent the brake from operating properly. Always store the unit in a place with low humidity.

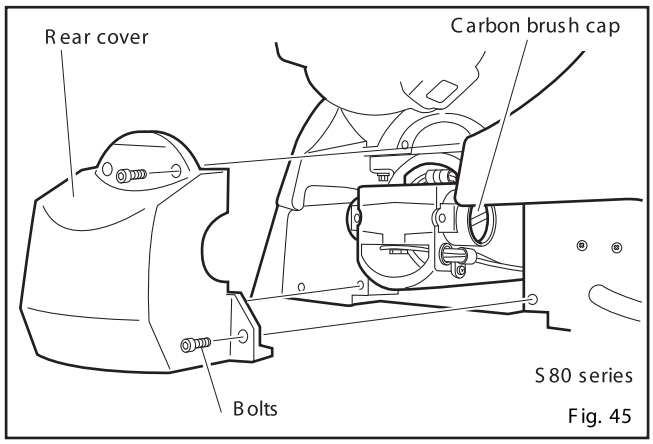

Fig. 45

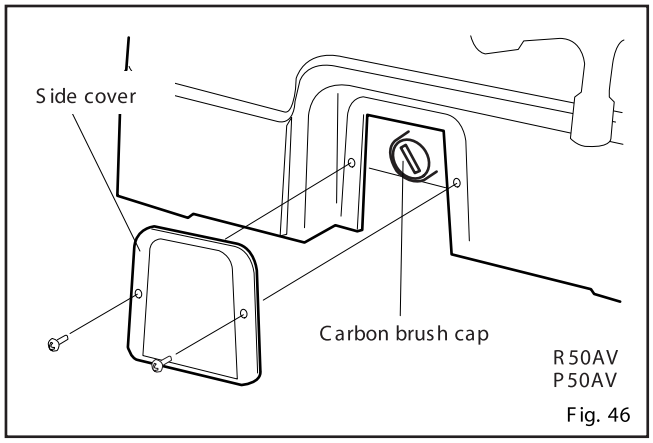

Fig. 46

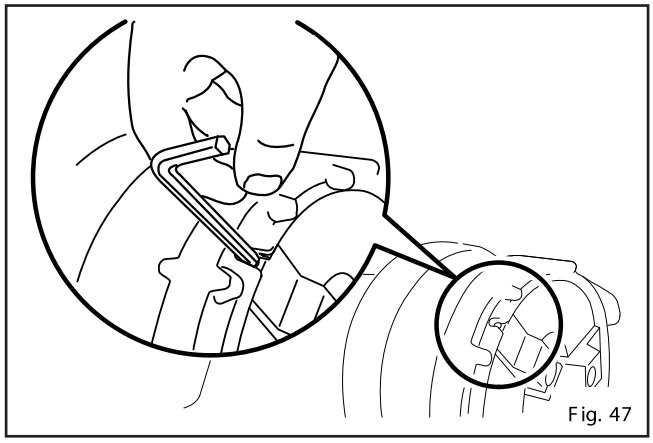
Fig. 47

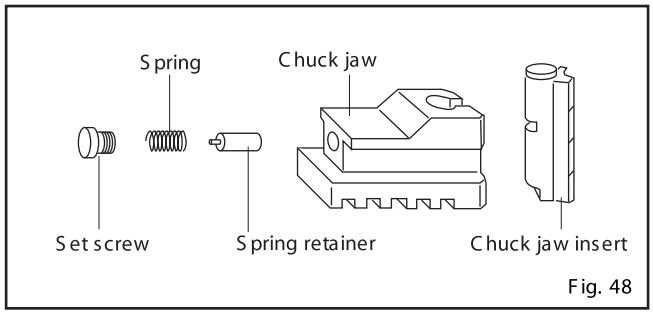

Fig. 48

e) Carbon Brushes with Automatic Stop
These machines employ carbon brushes with an automatic stop. If the working life of the brushes (approx. 250 hours) is exceeded, safe operation of the machine is still assured as the motor will stop automatically.

■ Changing the Brushes:

1. Be sure to unplug before changing the brushes.
2. Always change both carbon brushes at the same time.
3. Remove the side covers (R50AV series, P50AV) or remove the four bolts on the rear cover (S80 series), turn the carbon brush caps to the left using a screw driver (minus point) and remove the brushes.

f) Hammer Chuck Structure and Maintenance
Make sure that the chuck jaws and inserts of the hammer chuck are always clean and free of metal chips and dirt. Clean the chuck jaws and inserts from time to time with a wire brush. If it becomes difficult to hold the pipe in position, the chuck jaw inserts are worn. Always replace the chuck jaws inserts as a set. Each insert set consists of four parts: chuck jaw insert, spring retainer, spring and set screw.

Optional Accessories

A) Thread cutting oils

To ensure problem-free thread cutting and a long service life of the dies, we recommend using the following thread cutting oil.

Cutting oil

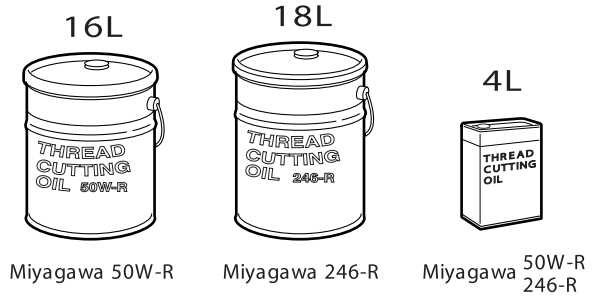

Fig. 49

B) Hi-support (pipe support for pipes up to 4")

Long pipe and rod must be supported with a height-adjustable pipe support. Four ball casters ensure an easy longitudinal and rotational movement of the pipe.

Hi-support

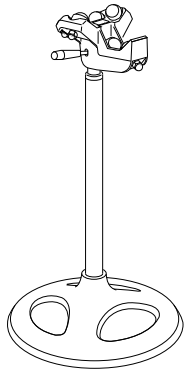

Fig. 50

C) Nipple attachment

This nipple attachment with internal tensioning allows clamping of short pipes with or without threads. Make sure that the pipe ends are reamed on the inside, and that the pipe pieces are always inserted as far as they will go.

Nipple attachment

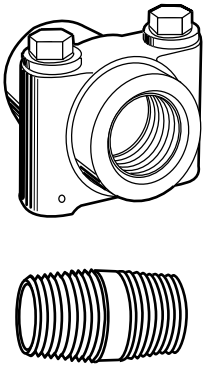

Fig. 51

Nipple attachment size (inch)	1/2	3/4	1	1 1/4	1 1/2	2	2 1/2	3
Minimum length of nipples (mm)	45	50	55	65	65	70	75	80

D) Die 1/4-3/8"
Bolt W5/16-7/8, W1-1 1/4,
UNC5/16-2
M8-52
Dies: 1/4-3/8"
Bolt W5/16, 3/8, 7/16, 1/2, 5/8, 3/4, 7/8, 1, 1 1/4
UNC5/16, 3/8, 7/16, 1/2, 5/8, 3/4, 7/8, 1, 1 1/4, 1 1/2, 2
M8, 10, 12, 14-16, 18-22, 24-27, 30-33, 36-39, 42-45, 48-52

Possible Causes of Malfunction

Symptom	Cause	Remedy
Machine dose not run	a) Poor contact at connecting plugs.	Have connection checked by qualified personnel.
	b) Brushes worn.	Replace brushes.
	c) NOT/AUS switch not released at foot switch.	Release NOT/AUS switch.
No/insufficient oil supply at die head	a) Insufficient cutting oil in tank.	Replenish cutting oil.
	b) Thumb screw on relief valve not opened.	Adjust oil supply quantity with the thumb screw.
	c) Inlet strainer plugged.	Clean inlet strainer.
Uneven thread cutting	a) Die jaws are dull.	Resharpen or replace dies.
	b) Dies are incorrectly installed.	Insert dies according to the markings on the die head.
	c) Incorrect or contaminated cutting fluid.	Change cutting oil.
Pipe slides in the chuck	a) Clamping jaws are excessively dirty.	Clean clamping jaws with a wire brush.
	b) Clamping jaws are worn out.	Replace clamping jaws.
Uni-auto V and Self-opening die heads only.		
Die head does not open in time (different thread lengths)	a) Stop lever loose.	Tighten screw.
	b) Die head is gummed up with cutting oil, or springs are weak.	Clean die head; replace springs.

Before requesting repairs and service

If any abnormalities occur with the unit, check the above and inform your sales agent or our sales division.

⚠ CAUTION

If any problems are not dealt with above, do not attempt to overhaul or repair the unit by yourself, but call our sales agent or sales division.
If repairs are performed by untrained or unskilled personnel, optimum performance cannot be attained, and accidents and injuries may occur.

⚠ Guarantee and Exemption from Liability

1. Should the machine happen to break down for no apparent reason, despite normal and correct use, repairs and service parts shall be provided free of charge as outlined below.

   Repairs shall be provided free of charge for a period of one year from date of purchase.
   Dates, procedures and methods for providing repairs and service parts shall be decided in consultation with the customer.
   After the one-year guarantee period, all repairs and service parts will be charged.
   Repairs may be charged even within the guarantee period under the following circumstances:
   - if the machine has not been used according to the instructions in the Operation Manual
   - if it has been used for anything other than its intended purpose
   - if it has not been repaired according to the Operation Manual or if it has been remodeled
   - if blades or consumables need replacing
   - if the machine has been handled in an inappropriate way.

2. REX will accept no responsibility under the following circumstances:
   - if a malfunction or accident occurs as a result of fire, abnormal fluctuations in voltage, damage from flood, earthquakes, lightning or other natural disasters, war, conflict, riot, terrorism or pollution, etc.
   - when the machine has not been operated according to the Operation Manual
   - when the machine has been used incorrectly, repaired or remodelled inappropriately
   - when a malfunction or accident results from using a thread made on the machine, or leaving it lying around and/or if it is exposed to the elements
   - when a malfunction or accident results from using a thread produced on the machine either while or after connecting it to a joint.

3. Any costs incurred by the manufacturer shall not exceed the purchase price of the machine.

REX

REX INDUSTRIES CO., LTD.

Overseas Sales Dept. & Factory :
1-9-3, Hishiyahigashi, Higashi Osaka 578-0948, Japan
Tel.: +81 - (0)72 - 961 - 9820 Fax.: +81 - (0)72 - 961 - 9878
URL https://www.rexind.co.jp

5A18-E3
R/P50/S80CE
0711D 0300

Specifications, colour, etc. may be changed without prior notification.