REX

PIPE THREADING MACHINE

NP50A/NR50A Series

PARTS LIST

As of November 2009

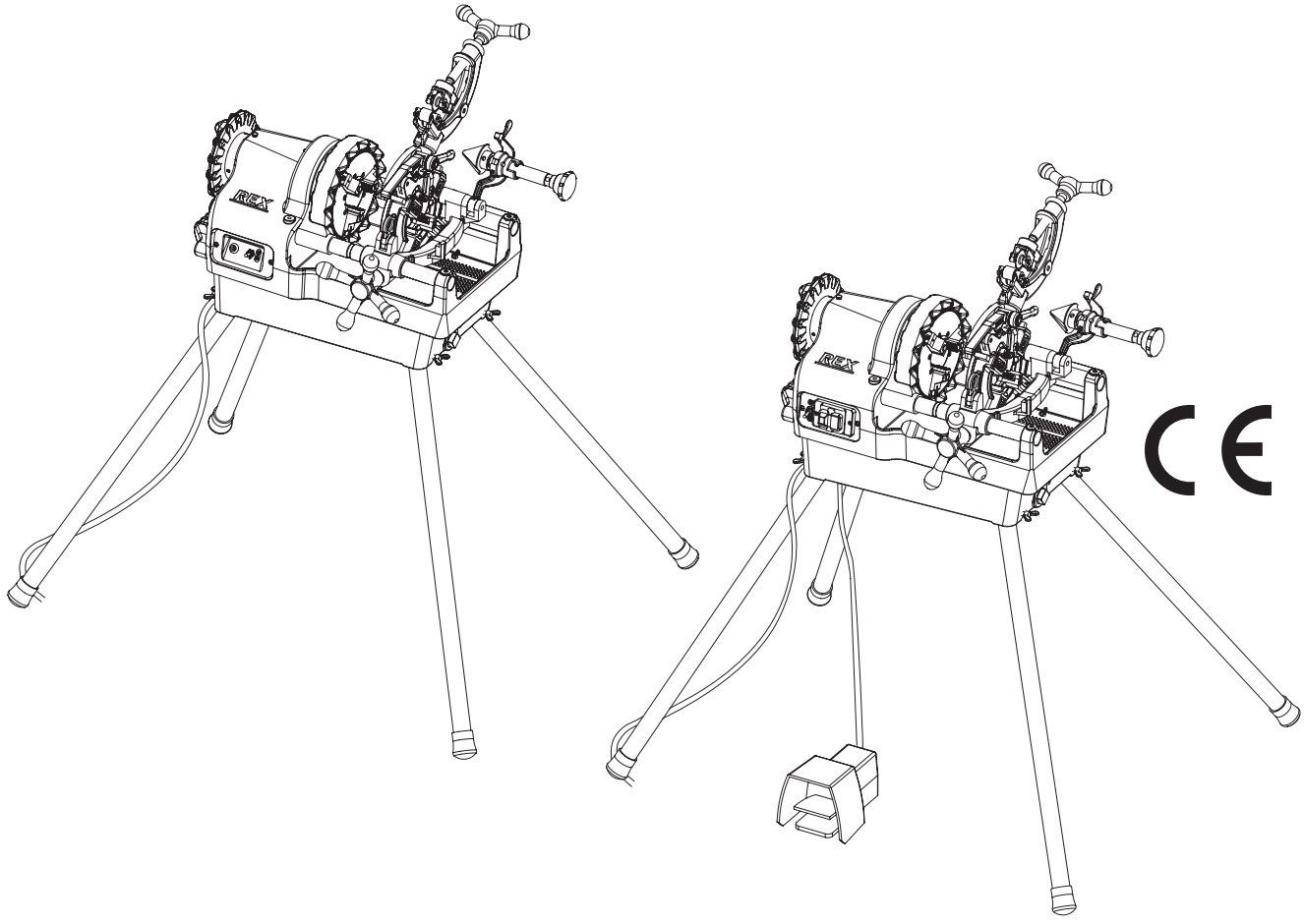

CE

CONTENTS

1. BASE
   BASE (CE)
2. MAIN SHAFT, MOTOR (*Include CE)
3. MOTOR ASSEMBLY
4. CARRIAGE
5. CUTTER , REAMER

REX

NP50A / NR50A Series - 1. BASE

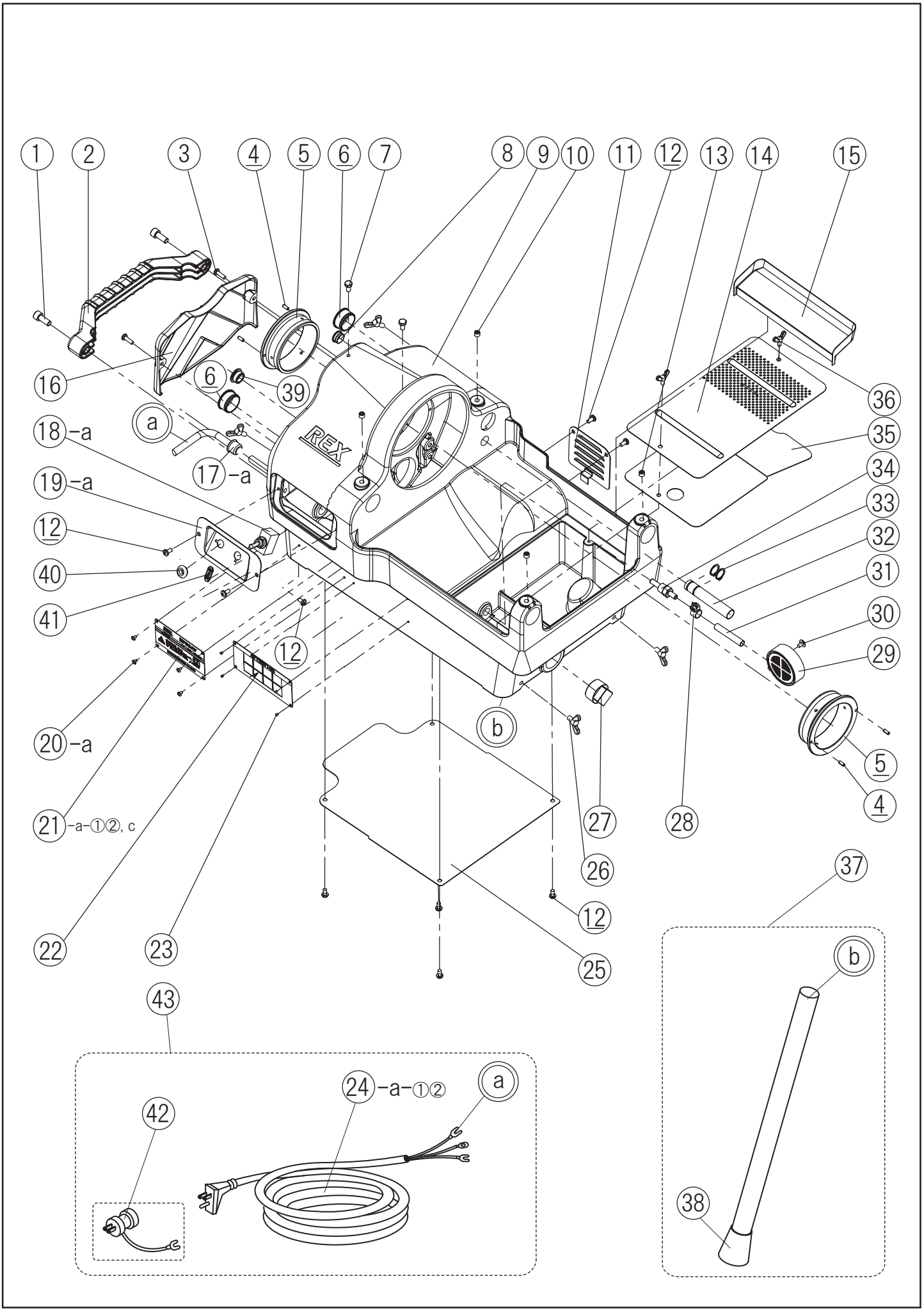

NP50A / NR50A Series (CE) - 1. BASE

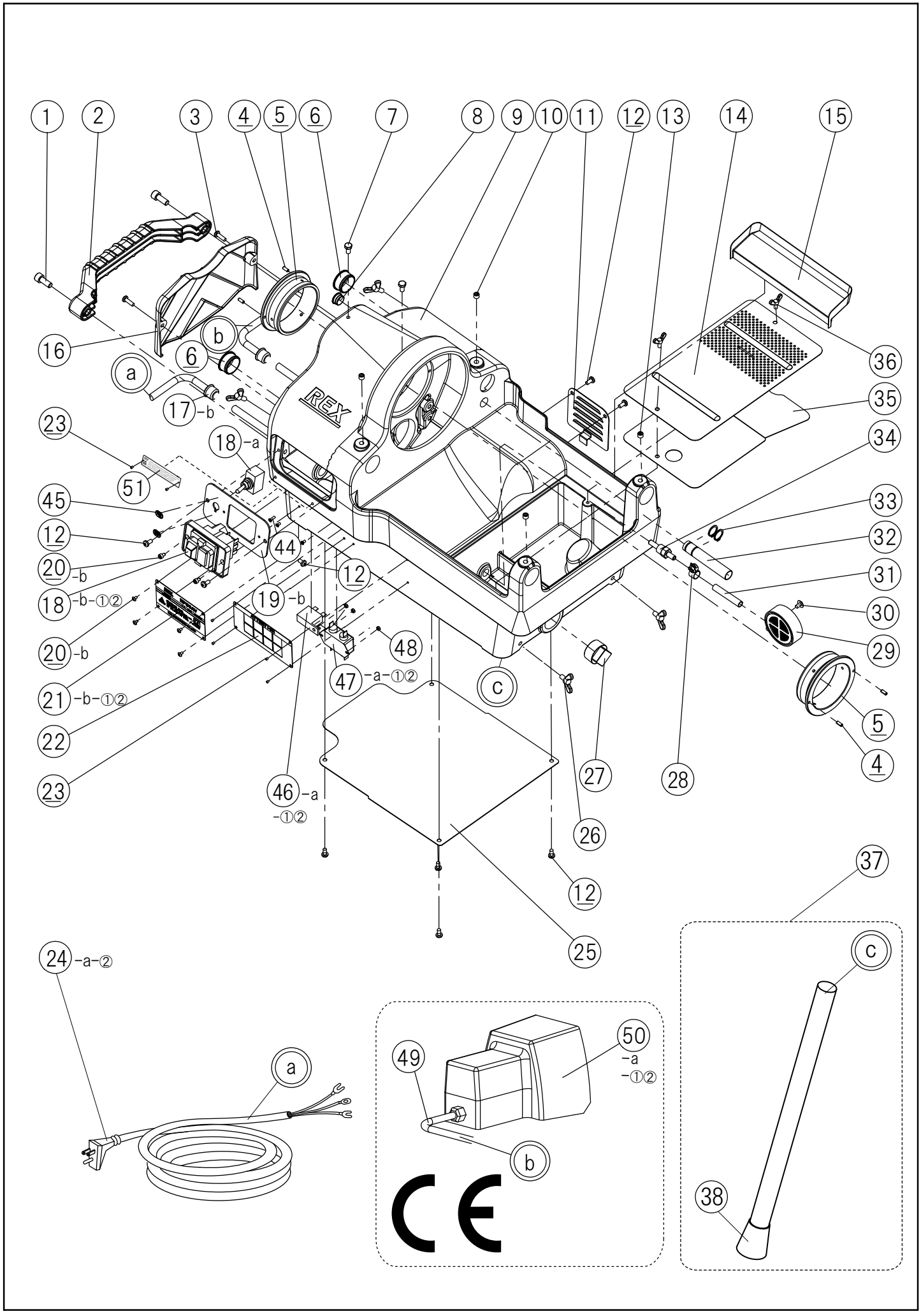

Page No.	Item No.	Page Title	CE	Part No.	Part Name	Spec.	Q'ty	Interchangeablity with:		Remarks
								P50AV	R50AV	
1	1	1.BASE		W083	HEX SOCKET HEAD CAP SCREW	M8×25	2	Y	Y	Y: YES
1	2	1.BASE		PM62	REAR GRIP		1	N	N	N: NO
1	3	1.BASE		W051	HEX SOCKET HEAD CAP SCREW	M5×16	2	-	-	- : Not used
1	4	1.BASE		WL41	ROLL PIN	4×10	4	Y	Y	
1	5	1.BASE		PM97	MAIN SHAFT BEARING		2	N	N	
1	6	1.BASE		PM64	PIPE SUPPORT STOPPER		2	-	-	
1	7	1.BASE		J009	GREASE NIPPLE		2	Y	Y	
1	8	1.BASE		N054	CAP		1	Y	Y	
1	9	1.BASE		PM60	BASE CASTING ASSEMBLY		1	N	N	
1	10	1.BASE		W78F	HEX SOCKET SET SCREW	CUP POINT M8×16	2	-	-	
1	11	1.BASE		PM13	SIDE COVER		1	N	N	
1	12	1.BASE		W252	PAN HEAD MACHINE SCREW	M5×10	9	N	N	
1	13	1.BASE		W781	HEX SOCKET SET SCREW	CUP POINT M8×8	2	-	-	
1	14	1.BASE		PM16	SCRAP RECEIVER A		1	N	N	
1	15	1.BASE		N624	OIL PAN		1	Y	Y	
1	16	1.BASE		PM61	REAR COVER		1	N	N	
1	17-a	1.BASE	No	PM94	CABLE GRAND		1	-	-	
1	17-b	1.BASE	Yes	PM94	CABLE GRAND		2	-	-	
1	18-a	1.BASE	No	MY20P	TOGGLE SWITCH		1	N	N	
1	18-b-(1)	1.BASE	Yes	PM35	ELECTROMAGNETIC SWITCH CE	230V / CE	1	N	N	
1	18-b-(2)	1.BASE	Yes	PM76	ELECTROMAGNETIC SWITCH CE	115V / CE	1	N	N	
1	19-a	1.BASE	No	PM32	SWITCH ADAPTER PLATE		1	N	N	
1	19-b	1.BASE	Yes	PM40	SWITCH ADAPTER PLATE CE		1	N	N	
1	20-a	1.BASE	No	W241	PAN HEAD MACHINE SCREW	M4× 8	4	N	N	
1	20-b	1.BASE	Yes	W241	PAN HEAD MACHINE SCREW	M4× 8	6	N	N	
1	21-a-(1)	1.BASE	No	PM44	NAME PLATE - NP50AV	P-type	1	N	N	not for sale
1	21-a-(2)	1.BASE	No	PM52	NAME PLATE - NR50AV	R-type	1	N	N	not for sale
1	21-a-(3)	1.BASE	No	PM1L	NAME PLATE - NP50A	P-type	1	N	N	not for sale
1	21-b-(1)	1.BASE	Yes	PM71	NAME PLATE - NP50AV CE	P-type	1	N	N	not for sale
1	21-b-(2)	1.BASE	Yes	PM53	NAME PLATE - NR50AV CE	R-type	1	N	N	not for sale
1	22	1.BASE		PM73	CAUTION PLATE		1	N	N	
1	23	1.BASE		WN34	RIVET	4× 5	4	Y	Y	
1	24-a-(1)	1.BASE		4082C	CABTYRE CORD	110V	1	N	N	
1	24-a-(2)	1.BASE		PM58	CABTYRE CORD	220V	1	N	N	
1	25	1.BASE		PM14	BOTTOM COVER		1	N	N	
1	26	1.BASE		WA83	WING BOLT	M8x30	4	Y	Y	
1	27	1.BASE		WA42	DRAIN PLUG		1	Y	Y	
1	28	1.BASE		ZJ50	PIPE BAND	10㎜	1	Y	Y	
1	29	1.BASE		N048	STRAINER		1	Y	Y	
1	30	1.BASE		WA55	TAPPING SCREW	M5× 8	1	Y	Y	
1	31	1.BASE		0411-55	OIL LINE TUBE G (STRAINER)	55㎜/GREEN	1	Y	Y	PMK6
1	32	1.BASE		PM47	OIL TUBE COVER		1	-	-	
1	33	1.BASE		WW16	SNAP RING	OUTSIDE φ16	2	Y	Y	
1	34	1.BASE		PN37	NIPPLE		1	Y	Y	
1	35	1.BASE		PM96	SCRAP RECEIVER B		1	-	-	
1	36	1.BASE		WA68	WING BOLT (Type II)	M5×8	2	-	-	
1	37	1.BASE		N121C	PIPE STAND W/ N125 LEG CAP		4	Y	Y	
1	38	1.BASE		N125C	LEG CAP		4	Y	Y	
1	39	1.BASE	Yes	PM65	CABLE HOLE CAP	CE	1	-	-	
1	40	1.BASE	No	PM57	SWITCH HOLE COVER		1	-	-	
1	41	1.BASE	No	PM74	ON-OFF STICKER		1	-	-	
1	42	1.BASE		4081	EARTHED ADAPTER		1	-	-	
1	43	1.BASE		4082	CAPTYRE CORD SET	115V	1set	N	N	incl. 42
1	44	1.BASE		W363	FLAT HEAD SCREW	M3×12	3	-	-	
1	45	1.BASE	Yes	PM75	FWD-REV STICKER CE	CE	1set	-	-	
1	46-a-(1)	1.BASE	Yes	PM93	SURGE PROTECTION SWITCH	230V CE	1	-	-	
1	46-a-(2)	1.BASE	Yes	PM78	SURGE PROTECTION SWITCH	115V CE	1	-	-	
1	47-a-(1)	1.BASE	Yes	PM92	ELECTROMAGNETIC FILTER	230V CE	1	-	-	
1	47-a-(2)	1.BASE	Yes	PM77	ELECTROMAGNETIC FILTER	115V CE	1	-	-	
1	48	1.BASE		WC03	NUT	M3	3	-	-	
1	49	1.BASE	Yes	PM59	FOOT SWITCH WIRE	CE	1	-	-	
1	50	1.BASE	Yes	PM79	FOOT SWITCH	230V /115V CE	1	-	-	
1	51	1.BASE	Yes	PM1C	WARNING PLATE for EM Switch	CE	1	-	-	

NP50A / NR50A Series (*Include CE) - 2. MAIN SHAFT, MOTOR

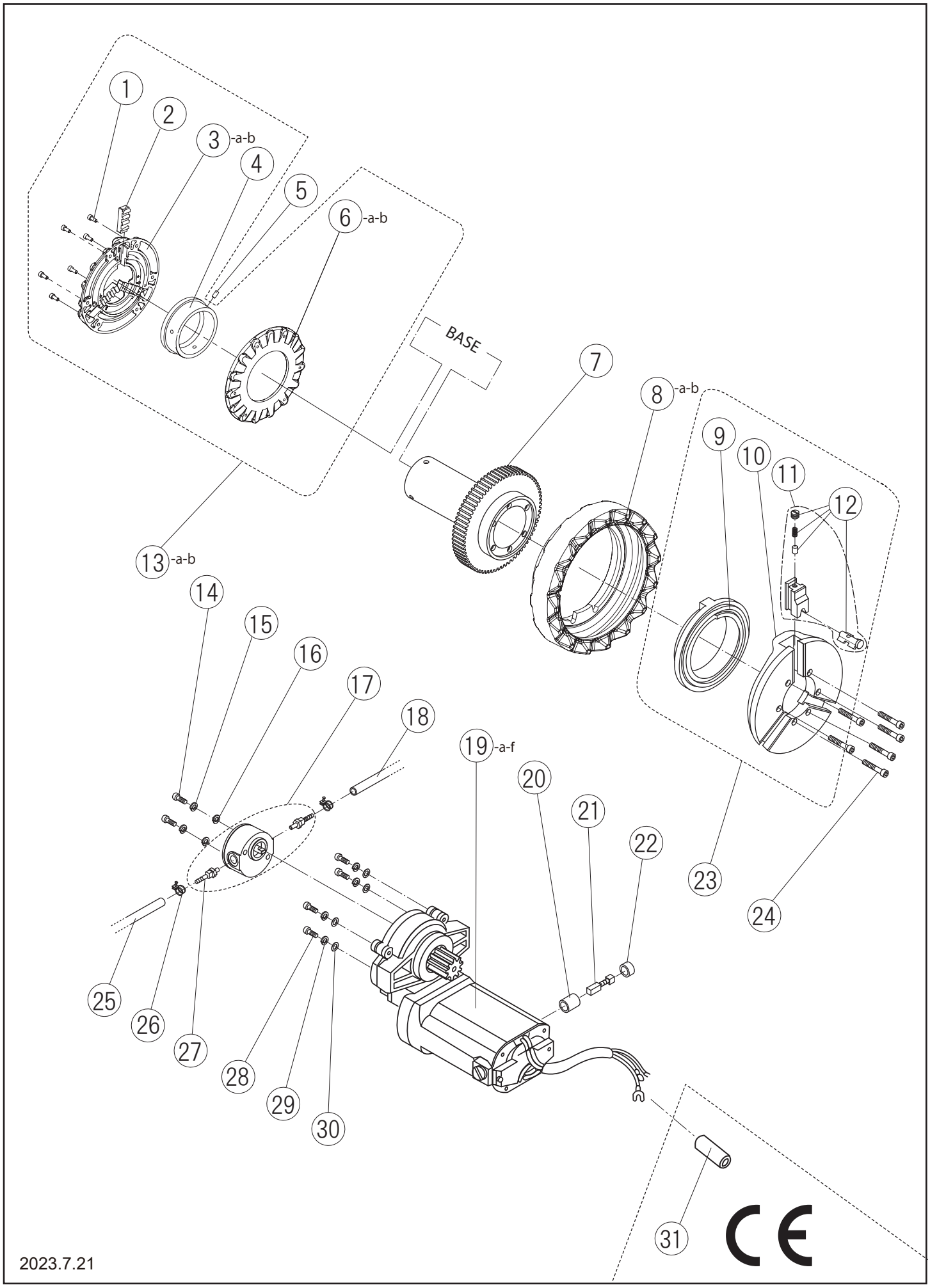

2023.7.21

Page No.	Item No.	Page Title	CE	Part No.	Part Name	Spec.	Q'ty	Interchangeablity with:		Remarks
								P50AV	R50AV	
2	1	2.MAIN SHAFT, MOTOR		W053	SOCKET HEAD CAP SCREW	M5×12	6	N	N	
2	2	2.MAIN SHAFT, MOTOR		PM11	REAR CHUCK JAW		1set	N	N	3pcs/set
2	3-a	2.MAIN SHAFT, MOTOR		PM09	REAR CHUCK RECEPTACLE	P-type - RED	1	N	N	
2	3-b	2.MAIN SHAFT, MOTOR		PM69	REAR CHUCK RECEPTACLE	R-type - BLACK	1	N	N	
2	4	2.MAIN SHAFT, MOTOR		PM10	REAR SCROLL		1	N	N	
2	5	2.MAIN SHAFT, MOTOR		WM62	GROOVED PIN	C6×12	3	N	N	
2	6-a	2.MAIN SHAFT, MOTOR		PM08	REAR CHUCK COVER	P-type - RED	1	N	N	
2	6-b	2.MAIN SHAFT, MOTOR		PM68	REAR CHUCK COVER	R-type - BLACK	1	N	N	
2	7	2.MAIN SHAFT, MOTOR		02NNC	MAIN SHAFT WITH GEAR		1set	N	N	
2	8-a	2.MAIN SHAFT, MOTOR		PM06	HAND WHEEL	P-type - RED	1	I	AI	AI: Yes, but different color and form
2	8-b	2.MAIN SHAFT, MOTOR		PM70	HAND WHEEL	R-type - BLACK	1	AI	I	
2	9	2.MAIN SHAFT, MOTOR		NS00	FRONT SCROLL		1	I	I	I: Yes, but differ in form
2	10	2.MAIN SHAFT, MOTOR		NH00	CHUCK BODY		1	Y	Y	
2	11	2.MAIN SHAFT, MOTOR		N0CJS	CHUCK JAW SET WITH NO.12		1set	Y	Y	3pcs/set
2	12	2.MAIN SHAFT, MOTOR		70KS	CHUCK JAW INSERT SET	KS-type	1set	Y	Y	
2	13-a	2.MAIN SHAFT, MOTOR		PM07	REAR CHUCK COMPLETE SET	P-type - RED	1set	N	N	
2	13-b	2.MAIN SHAFT, MOTOR		PM67	REAR CHUCK COMPLETE SET	R-type - BLACK	1set	N	N	
2	14	2.MAIN SHAFT, MOTOR		W067	HEX SOCKET HEAD CAP SCREW	M6×40	2	N	N	
2	15	2.MAIN SHAFT, MOTOR		WG06	SPRING WASHER	M6	2	Y	Y	
2	16	2.MAIN SHAFT, MOTOR		WI61	FLAT WASHER	M6	2	-	-	
2	17	2.MAIN SHAFT, MOTOR		PM30	GEAR PUMP with Joint (1035)		1	N	N	incl. 27 (2013.1.15-)
2	18	2.MAIN SHAFT, MOTOR		0411-550	OIL LINE TUBE G (INTAKE)	550mm/GREEN	1	N	N	PMK8
2	19-a	2.MAIN SHAFT, MOTOR	No	PM1E	MOTOR	115V R 1000W	1	N	N	
2	19-b	2.MAIN SHAFT, MOTOR	No	PM1F	MOTOR	115V R/L 1000W	1	N	N	
2	19-c	2.MAIN SHAFT, MOTOR	Yes	PM1G	MOTOR	115V CE R/L 1000W	1	N	N	
2	19-d	2.MAIN SHAFT, MOTOR	No	PM1H	MOTOR	230V R 1000W	1	N	N	
2	19-e	2.MAIN SHAFT, MOTOR	Yes	PM1J	MOTOR	230V CE R/L 1000W	1	N	N	
2	19-f	2.MAIN SHAFT, MOTOR	Yes	PM1K	MOTOR	230V CE R 1000W	1	N	N	
2	20	2.MAIN SHAFT, MOTOR		PMM16	CARBON BRUSH HOLDER		1set	N	N	2pcs/set
2	21	2.MAIN SHAFT, MOTOR		PMM10	CARBON BRUSH		1set	N	N	2pcs/set
2	22	2.MAIN SHAFT, MOTOR		PMM17	CARBON BRUSH CAP		1set	N	N	2pcs/set
2	23	2.MAIN SHAFT, MOTOR		N006	CHUCK COMPLETE SET	(K-S)	1set	Y	Y	
2	24	2.MAIN SHAFT, MOTOR		W07B	HEX SOCKET HEAD CAP SCREW	M7×54	6	Y	Y	without knurling
2	25	2.MAIN SHAFT, MOTOR		0411-700	OIL LINE TUBE G (FEED)	700mm/GREEN	1	N	N	PMK7
2	26	2.MAIN SHAFT, MOTOR		ZJ50	PIPE BAND	10mm	2	Y	Y	
2	27	2.MAIN SHAFT, MOTOR		1035	JOINT		2	Y	Y	
2	28	2.MAIN SHAFT, MOTOR		W08N	HEX SOCKET HEAD CAP SCREW	M8×45	4	Y	Y	
2	29	2.MAIN SHAFT, MOTOR		WG08	SPRING WASHER	M8	4	Y	Y	
2	30	2.MAIN SHAFT, MOTOR		WI81	FLAT WASHER	M8	4	N	N	
2	31	2.MAIN SHAFT, MOTOR	Yes	PM91	FERRITE	CE	1	-	-	

NP50A / NR50A Series - 3. MOTOR ASSEMBLY

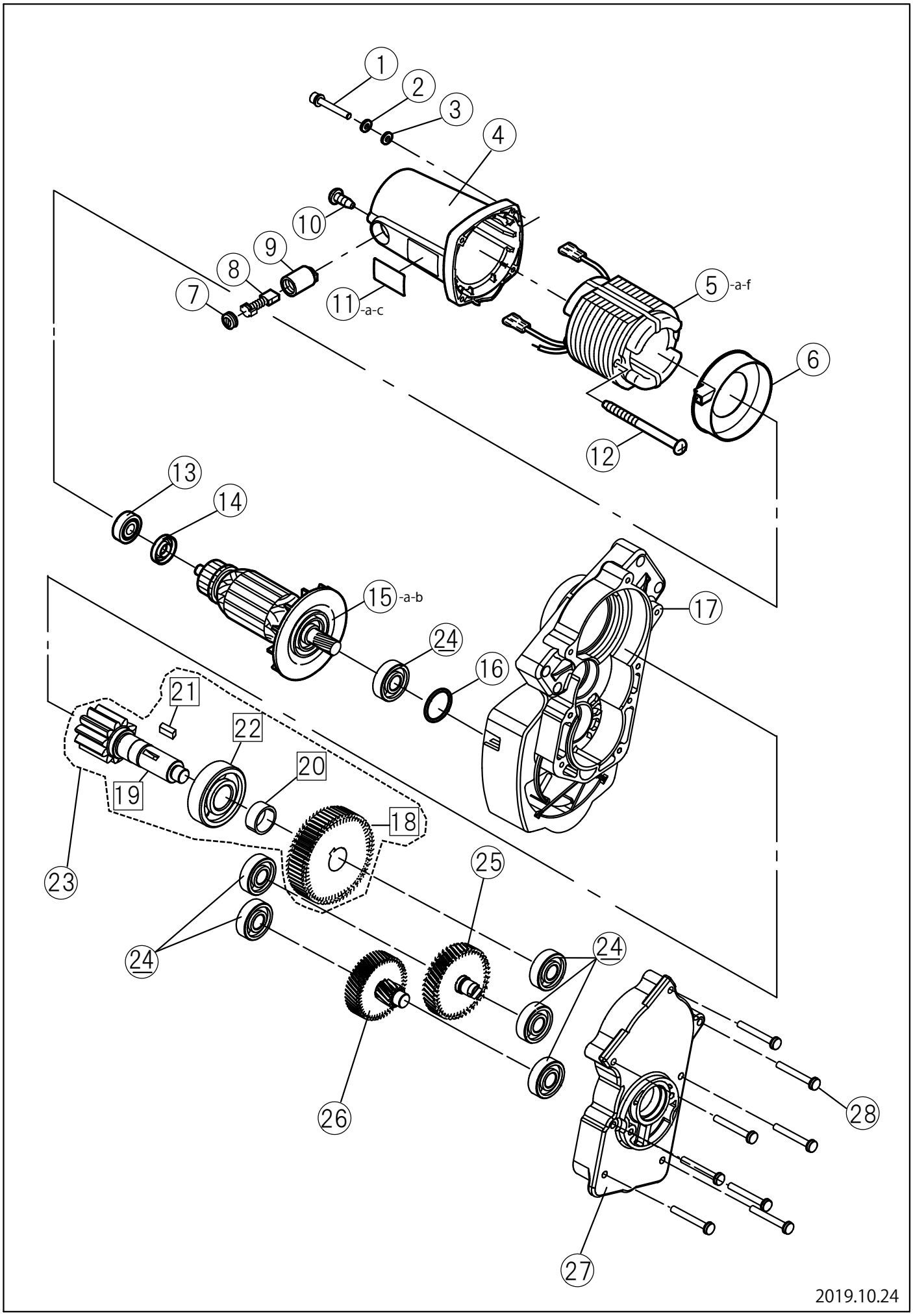

Page No.	Item No.	Page Title	CE	Part No.	Part Name	Spec.	Q'ty	Interchangeablity with:		Remarks
								P50AV	R50AV	
3	1	3.MOTOR ASSEMBLY		PMM61	HEX SOCKET HEAD CAP SCREW	M5×30	4	N	N	
3	2	3.MOTOR ASSEMBLY		PMM62	SPRING WASHER	M5	4	N	N	
3	3	3.MOTOR ASSEMBLY		PMM63	WASHER	5.3×10×1	4	N	N	
3	4	3.MOTOR ASSEMBLY		PMM07	MOTOR CASE		1	N	N	
3	5-a	3.MOTOR ASSEMBLY	No	PMM1E	STATOR ASSEMBLY	115V R 1000W	1	N	N	PM1E
3	5-b	3.MOTOR ASSEMBLY	No	PMM1F	STATOR ASSEMBLY	115V R/L 1000W	1	N	N	PM1F
3	5-c	3.MOTOR ASSEMBLY	Yes	PMM1G	STATOR ASSEMBLY	115V CE R/L 1000W	1	N	N	PM1G
3	5-d	3.MOTOR ASSEMBLY	No	PMM1H	STATOR ASSEMBLY	230V R 1000W	1	N	N	PM1H
3	5-e	3.MOTOR ASSEMBLY	Yes	PMM1J	STATOR ASSEMBLY	230V CE R/L 1000W	1	N	N	PM1J
3	5-f	3.MOTOR ASSEMBLY	Yes	PMM1K	STATOR ASSEMBLY	230V CE R 1000W	1	N	N	PM1K
3	6	3.MOTOR ASSEMBLY		PMM09	FAN CASING		1	N	N	
3	7	3.MOTOR ASSEMBLY		PMM17	CARBON BRUSH CAP		1 set	N	N	2pcs/set
3	8	3.MOTOR ASSEMBLY		PMM10	CARBON BRUSH	716SD	1 set	N	N	2pcs/set
3	9	3.MOTOR ASSEMBLY		PMM16	CARBON BRUSH HOLDER		1 set	N	N	2pcs/set
3	10	3.MOTOR ASSEMBLY		PMM55	TAPPING SCREW (B)	M4×14	2	N	N	
3	11-a	3.MOTOR ASSEMBLY		PMMZ1	NAME PLATE	100V	1	N	N	not for sale
3	11-b	3.MOTOR ASSEMBLY		PMMZ2	NAME PLATE	115V	1	N	N	not for sale
3	11-c	3.MOTOR ASSEMBLY		PMMZ3	NAME PLATE	230V	1	N	N	not for sale
3	12	3.MOTOR ASSEMBLY		PMM56	TAPPING SCREW (B)	M5×75	2	N	N	
3	13	3.MOTOR ASSEMBLY		PMM31	BALL BEARING	#6200LLB	1	N	N	
3	14	3.MOTOR ASSEMBLY		PMM32	DUST COLLAR		1	N	N	
3	15-a	3.MOTOR ASSEMBLY		PMM02	ARMATURE	115V	1	N	N	for PM1E, PM1F, PM1G
3	15-b	3.MOTOR ASSEMBLY		PMM50	ARMATURE	230V	1	N	N	for PM1H, PM1J, PM1K
3	16	3.MOTOR ASSEMBLY		PMM64	O-RING	S-32	1	N	N	S-32
3	17	3.MOTOR ASSEMBLY		PMM03	GEAR CASE		1	N	N	
3	18	3.MOTOR ASSEMBLY		PMM11	FINAL GEAR		1	N	N	
3	19	3.MOTOR ASSEMBLY		PMM12	FINAL PINION GEAR		1	N	N	
3	20	3.MOTOR ASSEMBLY		PMM13	SPINDLE		1	N	N	to be supplied as No.23 set
3	21	3.MOTOR ASSEMBLY		PMM14	PARALLEL KEY	5×5×14	1	N	N	
3	22	3.MOTOR ASSEMBLY		PMM15	BALL BEARING	#6304LLB	1	N	N	
3	23	3.MOTOR ASSEMBLY		PMM1S	FINAL GEAR ASS'Y	No.18-22	1 set	N	N	No.18-22 as a set
3	24	3.MOTOR ASSEMBLY		PMM60	BALL BEARING	#6201LLB	6	N	N	
3	25	3.MOTOR ASSEMBLY		PMM2S	SECOND GEAR ASS'Y		1 set	N	N	
3	26	3.MOTOR ASSEMBLY		PMM3S	FIRST GEAR ASS'Y		1 set	N	N	
3	27	3.MOTOR ASSEMBLY		PMM04	GEAR COVER		1	N	N	
3	28	3.MOTOR ASSEMBLY		PMM65	PHILLIPS PAN SCREW	M5×40	8	N	N	

NP50A / NR50A Series - 4. CARRIAGE

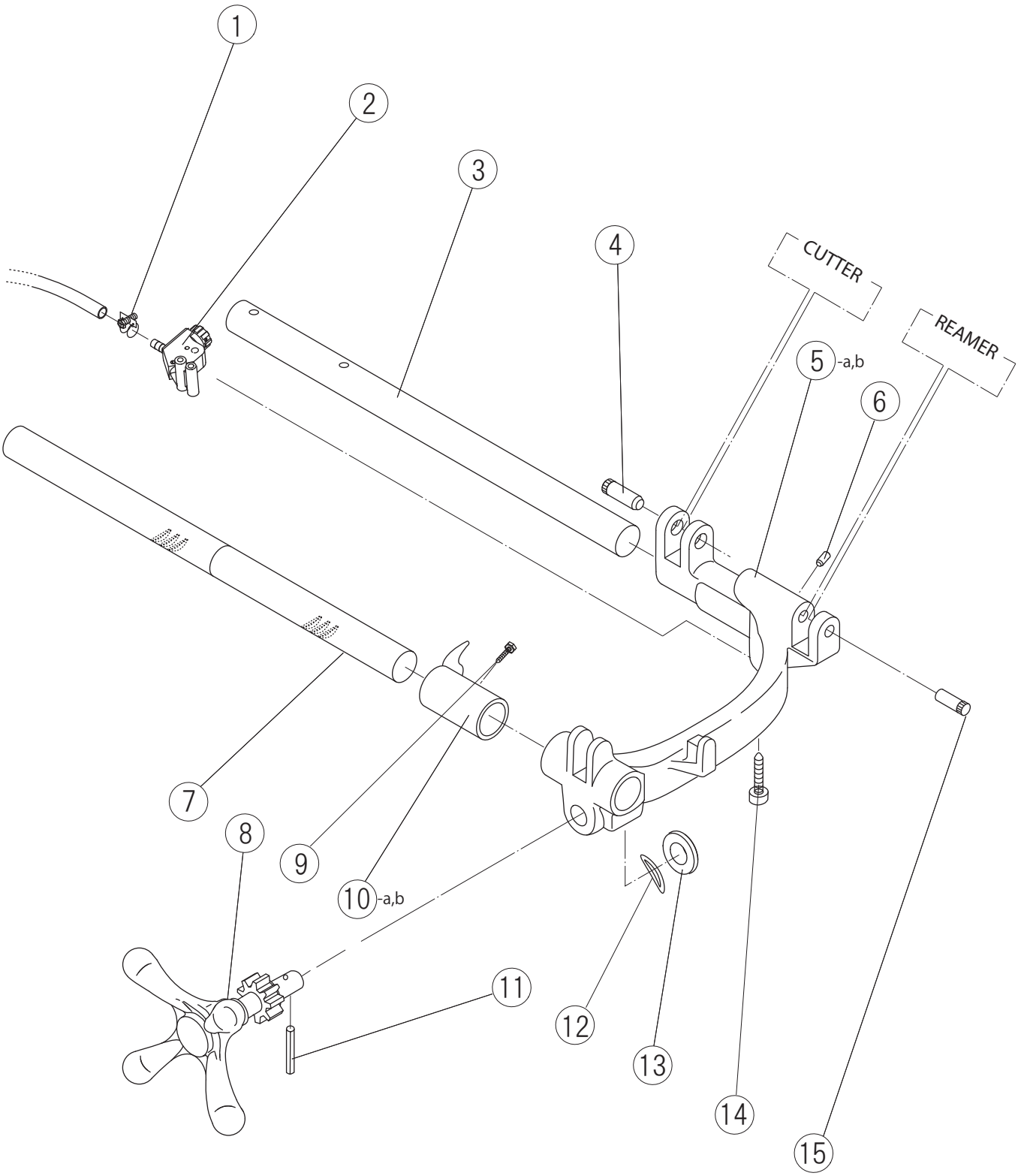

2019.10.24

Page No.	Item No.	Page Title	CE	Part No.	Part Name	Spec.	Q'ty	Interchangeablity with:		Remarks
								P50AV	R50AV	
4	1	4.CARRIAGE		ZJ50	PIPE BAND	10mm	1	Y	Y	
4	2	4.CARRIAGE		PM55	OIL TUBE CONNECTOR		1	N	N	
4	3	4.CARRIAGE		PM04	CARRIAGE SUPPORT BAR B		1	N	N	
4	4	4.CARRIAGE		1076	CUTTER ARM STOP PIN		1	Y	Y	
4	5-a	4.CARRIAGE		PM88	CARRIAGE	P-type	1	N	N	
4	5-b	4.CARRIAGE		PM89	CARRIAGE	R-type - BLACK	1	N	N	
4	6	4.CARRIAGE		G861	STOPPER	Φ10	1	Y	Y	
4	7	4.CARRIAGE		PM03	CARRIAGE SUPPORT BAR A		1	N	N	
4	8	4.CARRIAGE		PM41	CARRIAGE HANDLE	With FEED GEAR SHAFT	1	N	N	
4	9	4.CARRIAGE		PN38	SECURITY COLLAR SCREW	M5x10	1	Y	Y	
4	10-a	4.CARRIAGE		N200	SECURITY COLLAR	P-type - RED	1	Y	Y	
4	10-b	4.CARRIAGE		N081	SECURITY COLLAR	R-type - BLACK	1	Y	Y	
4	11	4.CARRIAGE		WL54	ROLL PIN	5×20	1	N	N	
4	12	4.CARRIAGE		WH18	WAVE WASHER	18	1	N	N	
4	13	4.CARRIAGE		WI87C	FLAT WASHER	17×28×3	1	N	N	
4	14	4.CARRIAGE		W06B	HEX SOCKET HEAD CAP SCREW	M6×25	1	N	N	
4	15	4.CARRIAGE		1096	REAMER HOLDER STOP PIN		1	Y	Y	

NP50A / NR50A Series - 5. CUTTER, REAMER

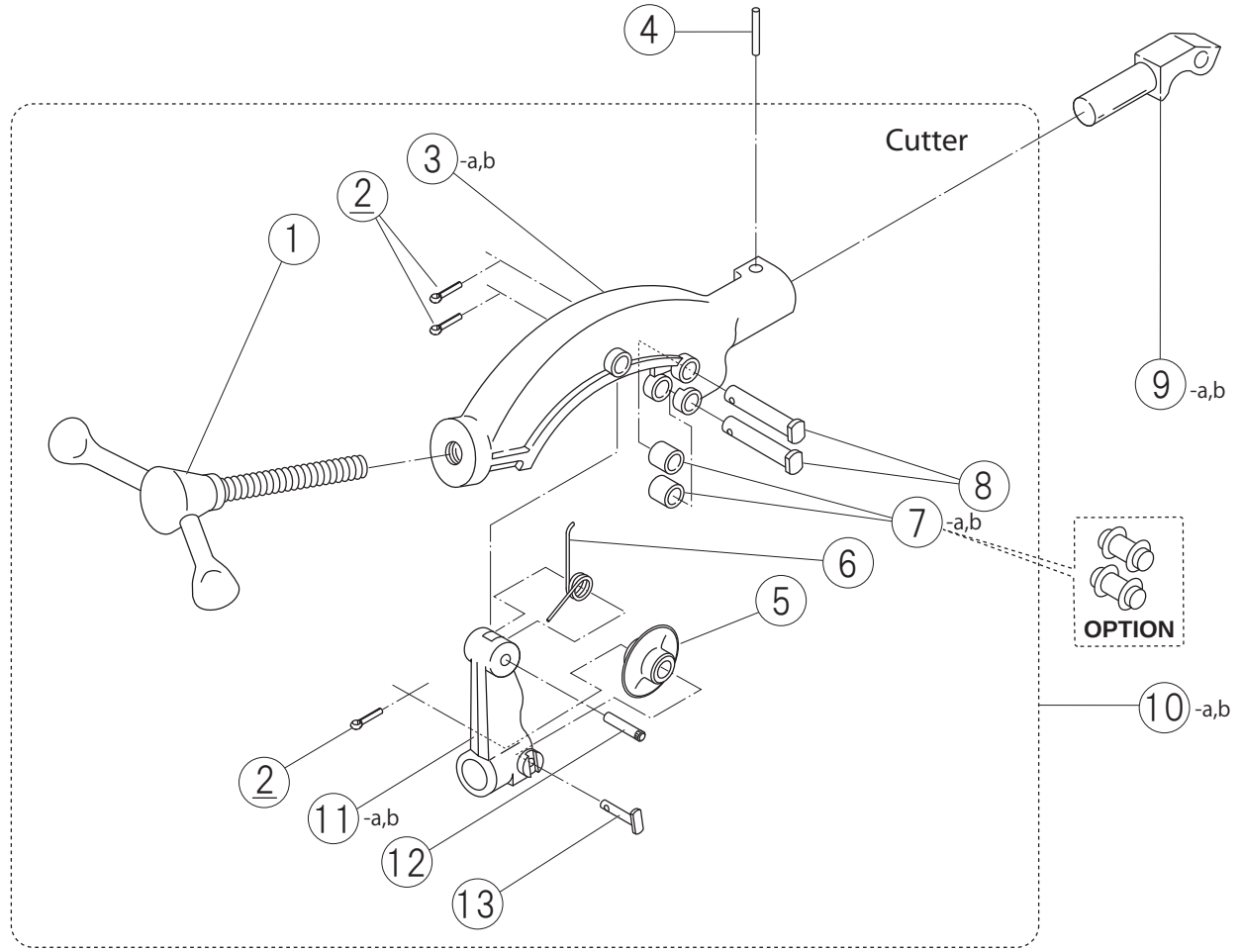

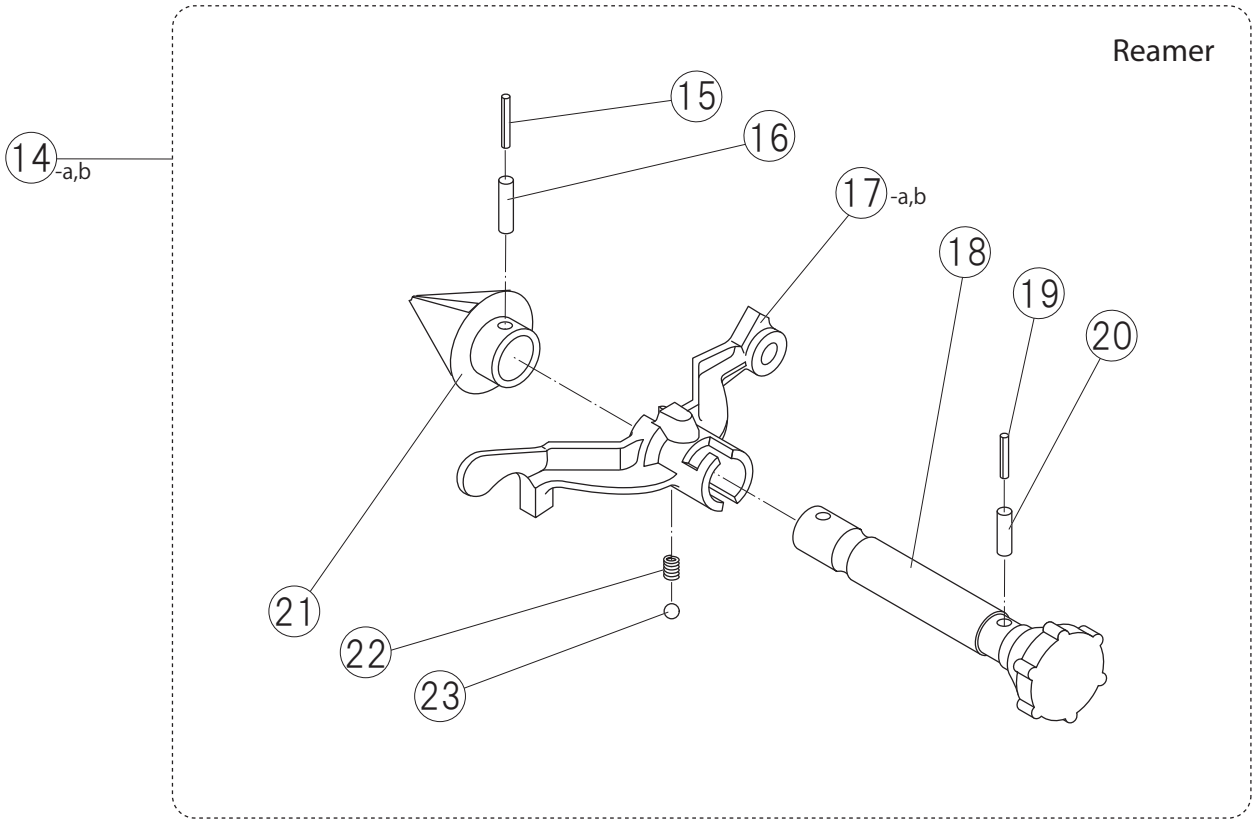

2019.10.24

Page No.	Item No.	Page Title	CE	Part No.	Part Name	Spec.	Q'ty	Interchangeablity with:		Remarks
								P50AV	R50AV	
5	1	5.CUTTER, REAMER		PM43	CUTTER HANDLE WITH FEED SCREW		1	I	I	I: Yes, but differ in form
5	2	5.CUTTER, REAMER		WN12	SPLIT PIN	#2.3×15	3	Y	Y	
5	3-a	5.CUTTER, REAMER		N020	CUTTER FRAME	P-type - RED	1	Y	A	A: Yes, but different color
5	3-b	5.CUTTER, REAMER		N602	CUTTER FRAME	R-type - BLACK	1	A	Y	
5	4	5.CUTTER, REAMER		4072	CUTTER FRAME STOP PIN	SHORT	1	Y	Y	
5	5	5.CUTTER, REAMER		135076	CUTTER WHEEL		1	Y	Y	see Product list
5	6	5.CUTTER, REAMER		9025	SPRING		1	Y	Y	
5	7-a	5.CUTTER, REAMER		5074	CUTTER ROLLER		2	Y	Y	
5	7-b	5.CUTTER, REAMER		5075	ROLLER BLADE for PLP	for PLP	2	Y	Y	Option
5	8	5.CUTTER, REAMER		5079	CUTTER PIN	LONG	2	Y	Y	
5	9-a	5.CUTTER, REAMER		N023	CUTTER ARM	P-type - RED	1	Y	A	
5	9-b	5.CUTTER, REAMER		N608	CUTTER ARM	R-type - BLACK	1	A	Y	
5	10-a	5.CUTTER, REAMER		0NCTPS	CUTTER COMPLETE SET	P-type - RED	1 set	I	AI	
5	10-b	5.CUTTER, REAMER		0NCNPS	CUTTER COMPLETE SET	R-type - BLACK	1 set	AI	I	
5	11-a	5.CUTTER, REAMER		4067	CUTTER GUIDE	P-type - RED	1	Y	A	
5	11-b	5.CUTTER, REAMER		N603	CUTTER GUIDE	R-type - BLACK	1	A	Y	
5	12	5.CUTTER, REAMER		9027	CUTTER GUIDE PIN		1	Y	Y	
5	13	5.CUTTER, REAMER		2471	CUTTER PIN	SHORT	1	Y	Y	
5	14-a	5.CUTTER, REAMER		0NRTPS	REAMER COMPLETE SET	P-type - RED	1 set	I	AI	AI: Yes, but different color and form
5	14-b	5.CUTTER, REAMER		0NRTRS	REAMER COMPLETE SET	R-type - BLACK	1 set	AI	I	
5	15	5.CUTTER, REAMER		WL59	ROLL PIN	5×45	1	Y	Y	Old No..WLA2：4.75x45
5	16	5.CUTTER, REAMER		WL87	ROLL PIN	8×45	1	Y	Y	
5	17-a	5.CUTTER, REAMER		RY28	REAMER ARM	P-type - RED	1	Y	A	Old No: PMK5/N025
5	17-b	5.CUTTER, REAMER		N605	REAMER ARM	R-type - BLACK	1	A	Y	
5	18	5.CUTTER, REAMER		N027	REAMER SHAFT (WITH HAND GRIP)		1 set	Y	Y	
5	19	5.CUTTER, REAMER		WL57	ROLL PIN	5x35	1	Y	Y	Old No.:WLA1(4.75x35)
5	20	5.CUTTER, REAMER		WL86	ROLL PIN	8×35	1	Y	Y	
5	21	5.CUTTER, REAMER		PM38	REAMER CONE		1	I	I	
5	22	5.CUTTER, REAMER		5096	SPRING	8×10	1	Y	Y	
5	23	5.CUTTER, REAMER		WQ08	STEEL BALL	8	1	Y	Y	

REX

www.rexind.co.jp

REX INDUSTRIES CO., LTD.

Overseas Sales Section & Factory :
1-9-3, Hishiyahigashi, Higashi Osaka 578-0948, Japan.
Tel.: 81 - 72 - 961 - 9820 Fax.: 81 - 72 - 961 - 9878

URL http://www.rexind.co.jp

●Specifications, colour, etc. may be changed without prior notification.

P.L.NP/NR50A-CE6
1910R 0000