AN OPERATIONAL MANUAL OF

REX 50A DX

REX 50A DX

CONTENTS :

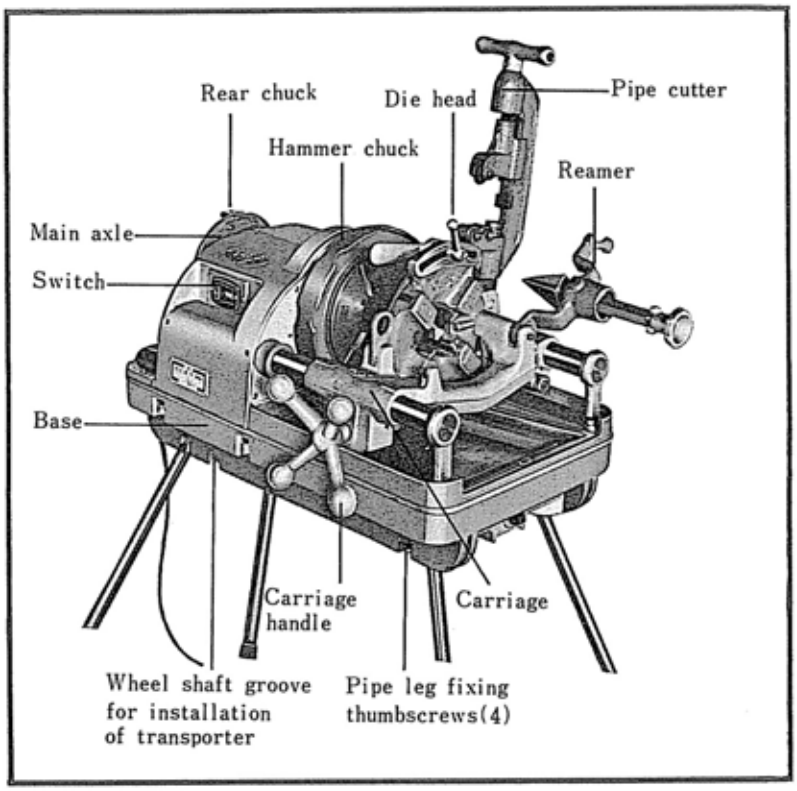

OPTIONAL ACCESSORIES

Die heads & dies

Die heads and dies for BSPT(¼ ~⅜″), Bolt(W.UNC.METRIC), NPT, Conduit and BSPT (left hand).

Automatic self-opening die heads and dies.

Universal die head (½ ~2″)

Dies

Dies for plastic coated pipe (BSPT) and stainless steel pipe (BSPT).

OTHER ACCESSORIES

Nipple attachment, pipe support

Roller wheels and chuck jaw inserts for plastic coated pipe.

Reversible machine available on request.

SPECIFICATIONS

Threading capacity	15A (½″)-50A (2″)
Voltage	100V/600W or 220V/700W
Motor	Single phase series motor
Rotation speed	28r.p.m (100V without load) 27r.p.m (220V without load)
Weight	174Lbs (79kg)
Dimentions from bed	705 (L) ×475 (W) ×395 (H) m/m

STANDARD ACCESSORIES

Die head	(½ —¾″) (1 —2″) 2 sets
Dies	(½—¾″) (1—1½″) (1½—2″) 3set
Tool box	1 pc
Hexagonal keys	3m/m, 4m/m, 5m/m, 6m/m, 8m/m, 5pcs
Screwdriver	Crosspoint lpc
Carbon brush	1 set
Thread cutting oil	4 liters 1 can
Bearing oil	1 pc (with oiler)
Machine cover	1 sheet
Stand	4 legs
Cutter wheel	1 pc

OPERATING GUIDE

1. POWER SOURCE

If attached cord is not long enough, use a short and thich cord which should be similar to the one conected to the machine. Attached cord is 5m long and 2mm thick. If that is done it will be economical and powerful. Be sure to set the earth without fail in operation.

2. MACHINE INSTALLATION

Set the rear chuck side higher to avoid the oil running into the pipe when cutting thread.

3. PIPE INSTALLATION AND REMOVAL

1) Open the rear chuck and hammer chuck wider than the pipe diameter and insert the pipe from the rear chuck side.
2) After tightening the rear chuck, hold the pipe with your right hand so that it can be centered in the chuck, then pull the hand wheel with your left hand to tighten the chuck. When the pipe is centered in the chuck, fix it firmly by one or two forceful pulls on the hand wheel.
3) Special care should be taken in tightening short pipes(which do not reach the rear chuck): Make sure the pipe is firmly in place bfore final tightening. If the hand wheel is abruptly tightened, the pipe may be jarred out of center which will result in uneven or shallow threads because the dies is not catching the pipe sufficiently and smoothly.
4) To remove pipe, turn hand wheel to inner side with counteraction, hammer chuck will then become loose. Then loosen scroll to remove pipe.

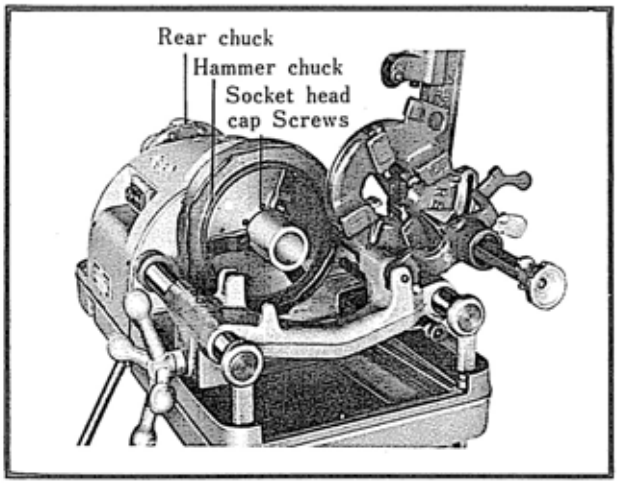

4. THREADING

Two die-heads : ½×¾″, and 1×2″are provided as standard accessories. Die-heads of ½×¾″ is for ½×¾″ dies use only however, another 1″×2″ die head can be used for 1×1½″ and 1½×2″ dies.

Moreover, all these die-heads and dies can also be used for Machine 32A, 40A 80ADX and APOLLO 100AST-3.

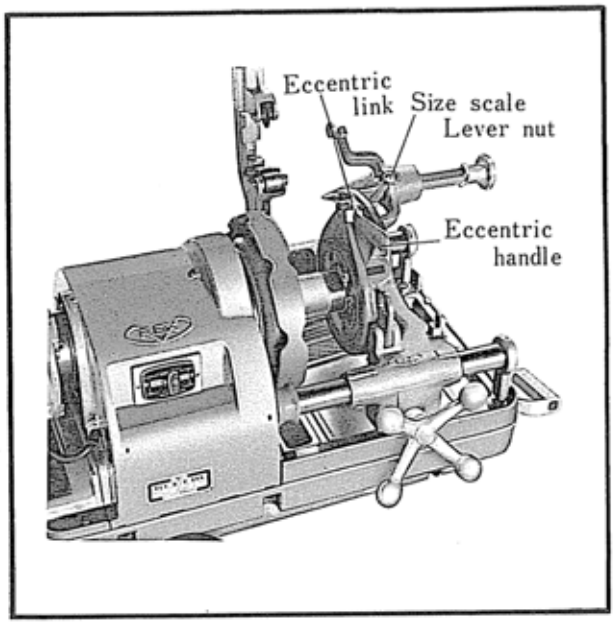

1) For setting threading size, set scale of eccentric link of eccentric handle at thread cutting size of die head and tighten lever nut.
2) Turn switch ON threading oil is automatically supply from the die head when the die head pull down.
3) Apply slight pressure on carriage handle until the dies catches the pipe width to two or three threads on the pipe.
4) Accompany right hand with eccentric and when required amount of screw is threaded, lift the eccentric handle slowly to the arrow and open the dies when completed threading.
Then finish thread cutting. If dies are opened rapidly, it may cause a defective screw finish, with steps on it.
5) After threading is completed turn off the switch, move the carriage away by carriage handle and separate the die head from the pipe. Now threading is finished.

PRECAUTIONS OF THREADING

a. Bring eccentric handle down near side and make sure that the scales of the thread cutting die head and eccentric link are matching while cutting.
b. It is sufficient to tighten lever nut lightly by hand.
c. Set size scale of eccentric handle to near side for over thread and to far side for under thread.

DIE HEAD DIES INSTALLATION AND REMOVAL

*DIES REMOVAL

First, remove die head from carriage. Then bring eccentric handle down to indicated direction, as illustrated below. Loosen lever nut and push eccentric handle part to far left edge. Now the four dies are removable.

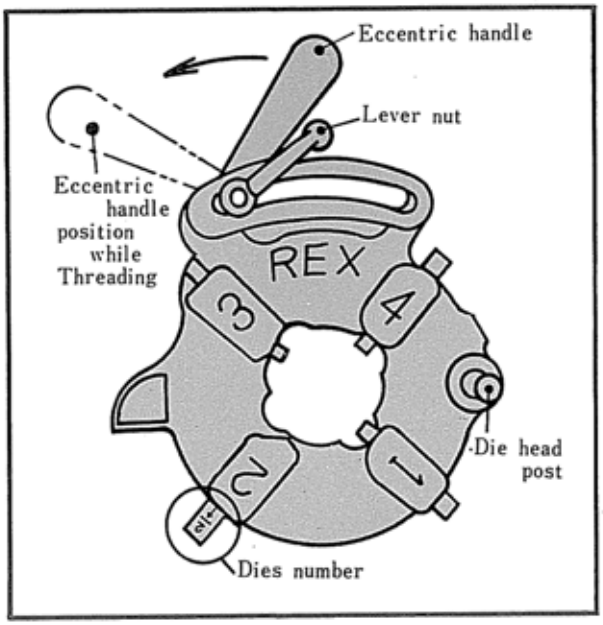

*DIES INSTALLATION

1) Match groove number of die head to dies number and insert all the way to dies scale. If numbers do not match, thread cannot be cut.
Dies come in a set of four and, be sure to use them together. If used separately, pipe will not be threaded properly.

2) Then move the eccentric handle in direction indicated by the arrow. By doing this, dies will fix into center of die head. Now the dies are completely replaced in the groove. If the eccentric handle will not move, this implies that one of the dies is improperly positioned. Pushing the handle lightly and holding up and down the dies will help to correct its position.

3) After setting dies correctly on the die head, insert die head into post hole and fit into the die head groove.
4) Set at desired thread size and commence operating.(Refer to thread cutting clause)

5. CUTTING AND REAMING PIPE

After cutting with pipe cutter, be sure to ream the inside with the reamer before cutting a thread.
1) Return die-head, burring reamer and pipe cutter.
2) Set the pipe at pipe cutter point.
3) Open Pipe Cutter blade wider than the pipe diam.
Close and fix cutter blade and roller to the pipe cutting point to attach softly.

4) Switch on and close slowly pipe cutter handle.
Recent pipe is extremely soft. If excessive power is used when cutting for the first time, the cut end of the pipe will be oval and cannot cut round screw properly. Tighten it with slight power and cut slowly.

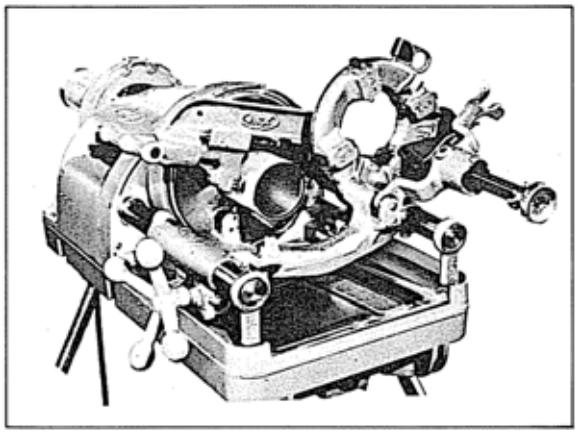

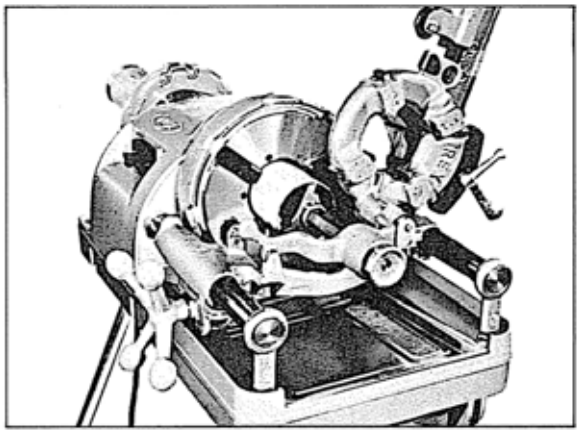

PIPE CUTTER SECTION OILING(SPINDLE OIL)

Be sure to supply spindle oil to feed screw, cutter wheel and roller every day. This provides for easy cutting and a longer life.

REAMING PIPE.

Down reamer, push the reamer knob and turn it to the left.
Switch on and rotate the pipe. Press the reamer inside of the pipe.

6. FORWARD AND REVERSE MACHINE(Available at extra cost)

Both forward and reverse are operated by switch. Oil pump for both turns is installed (cutting oil is supplied for both directions)

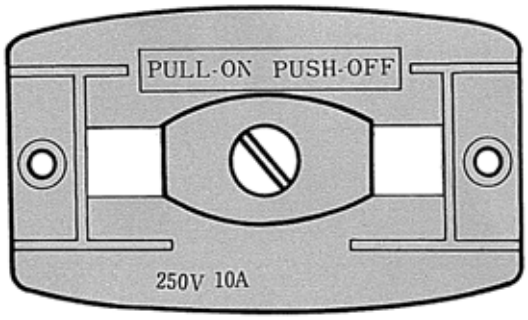

Forward movement:
Set the knob in horizontal position and pull.

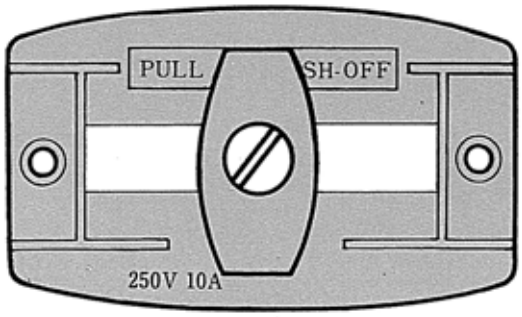

Reverse movement:
Set the knob in vertical position and pull.

MAINTENANCE

Rex selects materials of the highest quality for each part depending on its function. However, durability will largely depend on handling and maintenance.

A. Oiling of main bearing

Oil for main shaft (contained in an oiler) is supplied in a tool box. Main shaft is made of high quality oil-less metal specially studied and developed in collaboration with Hitachi Ltd. and Rex Ltd. to provide excellent durability.
Please be sure to refill the oil once every three months which assures you longevity of main shaft.

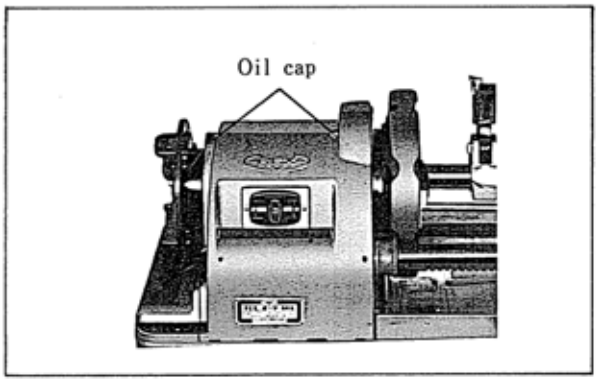

B. Carbon brush change

Remove cover at the rear of motor. Two carbon brushes are installed in right and left cap. After about 250-hours of use, carbon brushes if under 6mm in length should be replaced.
When carbon brush is worn to less than ⅔ (6mm), motor commutator surface may be damaged and motor life shortened. Carbon brush is the same size as (PS14-2) for the Hitachi electric drill.

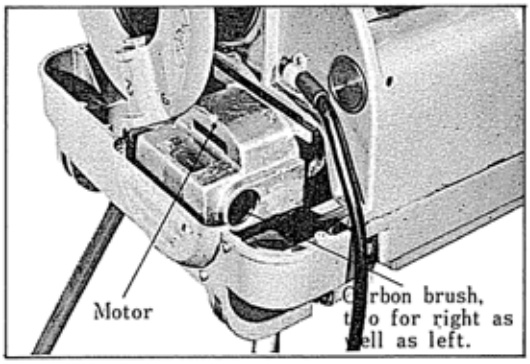

C. Oil tank structure and cleaning

Oil tank is constructed with threehold shelter for chips. Remove upper cover and plug once a month, to remove oil deposits and clean tank. Adjust to supply cutting oil smoothly. This prolongs the life of the pump.

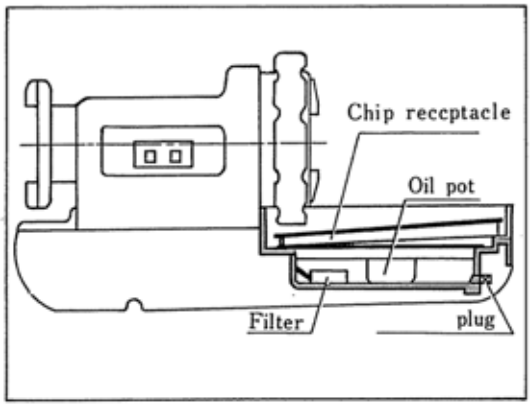

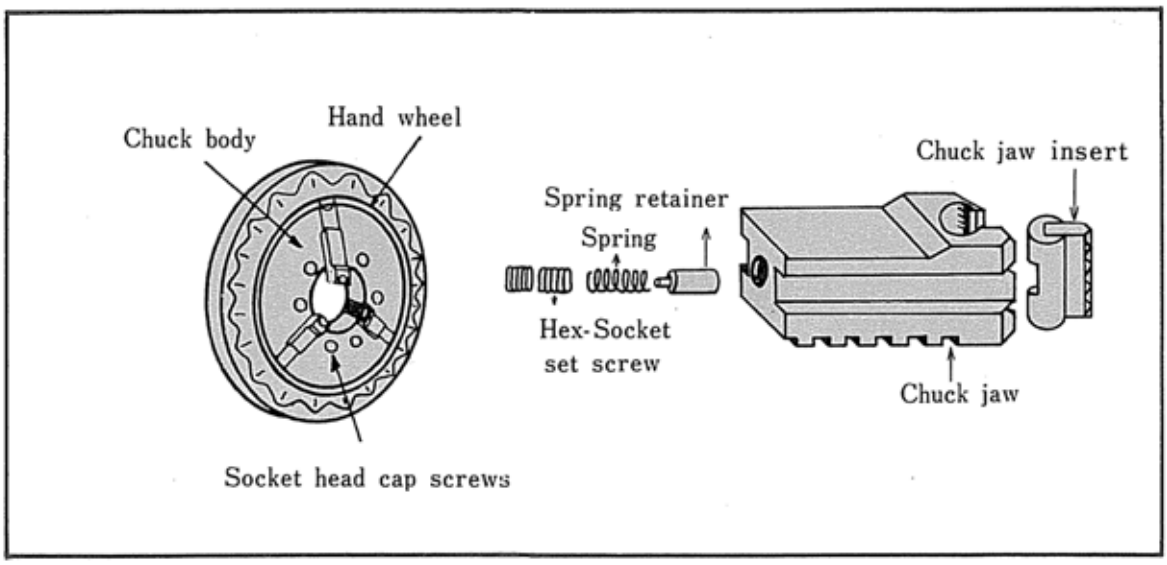

D. Hammer chuck structure and maintenance

The hammer chuck jaw incorporates 4 parts and when the teeth on the jaw inserts become worn and fail to hold pipe or rod during threading, replace the entire set of jaw inserts. Remove two Hex socket set screw at the position of the picture.

The hammer chuck is fixed to main shaft by six Socket head cap screws. Because loosening of these bolt affects threading, be sure to keep these six bolts permanently tight.

⚠ Guarantee and Exemption from Liability

1. Should the machine happen to break down for no apparent reason, despite normal and correct use, repairs and service parts shall be provided free of charge as outlined below.

   Repairs shall be provided free of charge for a period of one year from date of purchase.
   Dates, procedures and methods for providing repairs and service parts shall be decided in consultation with the customer.
   After the one-year guarantee period, all repairs and service parts will be charged.
   Repairs may be charged even within the guarantee period under the following circumstances:
   - if the machine has not been used according to the instructions in the Operation Manual
   - if it has been used for anything other than its intended purpose
   - if it has not been repaired according to the Operation Manual or if it has been remodeled
   - if blades or consumables need replacing
   - if the machine has been handled in an inappropriate way.

2. REX will accept no responsibility under the following circumstances:
   - if a malfunction or accident occurs as a result of fire, abnormal fluctuations in voltage, damage from flood, earthquakes, lightning or other natural disasters, war, conflict, riot, terrorism or pollution, etc.
   - when the machine has not been operated according to the Operation Manual
   - when the machine has been used incorrectly, repaired or remodelled inappropriately
   - when a malfunction or accident results from using a thread made on the machine, or leaving it lying around and/or exposed to the elements
   - when a malfunction or accident results from using a thread produced on the machine either while or after connecting it to a joint.

3. Any costs incurred by the manufacturer shall not exceed the purchase price of the machine.

REX

www.rexind.co.jp

REX INDUSTRIES CO., LTD.

Overseas Sales Dept. & Factory :
1-9-3, Hishiyahigashi, Higashi Osaka 578-0948, Japan
Tel.: +81 - (0)72 - 961 - 9820 Fax.: +81 - (0)72 - 961 - 9878

URL http://www.rexind.co.jp

50ADX-E1
50ADX
1204R 0000