REX

PIPE THREADING MACHINE

50/60Hz

150A

Ref. No. 198707

OPERATION MANUAL

Be sure to read this Operation Manual before using the machine.

- Note -

- Be sure to hand this operation manual to the user.
- To ensure safe and efficient use, read the manual thoroughly before using the machine.
- Be sure to keep the manual where the operator can refer to it whenever necessary.

Date of purchase: Year Month

Distributor:

Thank you for purchasing a REX pipe threading machine.
Precision-engineered for cutting, reaming, threading and, with our optional Portable Groovers, grooving steel and stainless steel (option) pipes, our product will give you years of reliable service if you simply follow the instructions in this manual carefully.
Before using the machine, therefore, make sure you read the manual from start to finish.
To avoid accident and injury, never use the machine for any purposes other than those described in this manual.
Should you need further advice, contact your distributor or REX Industries Co., Ltd.

CONTENTS

Definitions of CAUTION

CAUTION indicates actions which could possibly result in injury to the user, or physical damage, if the machine is used incorrectly.
Even items labelled CAUTION could have serious results under certain conditions.
Be sure to observe these warnings carefully as they greatly affect safety.

- If this operation manual is lost or damaged, promptly order a replacement from your distributor or our sales department.
- Parts and specifications are subject to change without prior notice, due to improvements in quality, performance or safety standards. In such cases, the contents, photographs, illustrations, etc. in this manual may be different to the product you have purchased.

REX 150A Main Parts

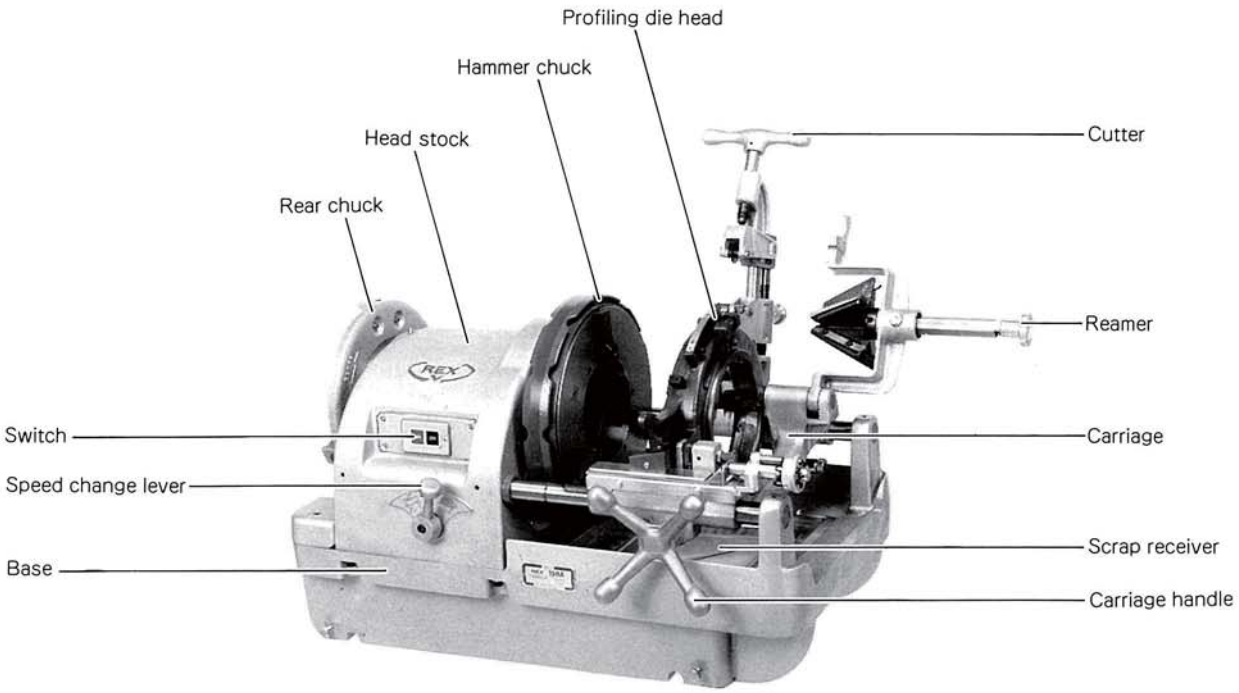

Specifications and Accessories

■ Specifications

Capacity: 2½-6″(threading, cutting, reaming)
Voltage: 220V
Motor: Single phase 750W condenser motor
Rotation speeds:

	60Hz	50Hz
2½-6″ cutting, reaming	22r.p.m	18r.p.m
2½-3″ threading	22r.p.m	18r.p.m
3½-6″ threading	7r.p.m	6r.p.m

Net weight: 378 lbs. (170kg)
Dimensions: 930(L)× 680(W)× 590(H)mm

■ Standard Accessories

Die heads: (2½-4″)(5-6″)one set each
Dies: (2½-4″)(5-6″)one set each
Thread cutting oil: 4 liters 1 can
Stand: 4 legs
Machine cover: 1
Tool box: 1
Hexagonal keys: 3, 4, 5, 6, 8 mm one each
Screwdriver: 200 mm 1
Adjustable wrench: 1 phillips head
Cutter wheel: 1
Bearinng oil: 1 (with oiler)

Preparation

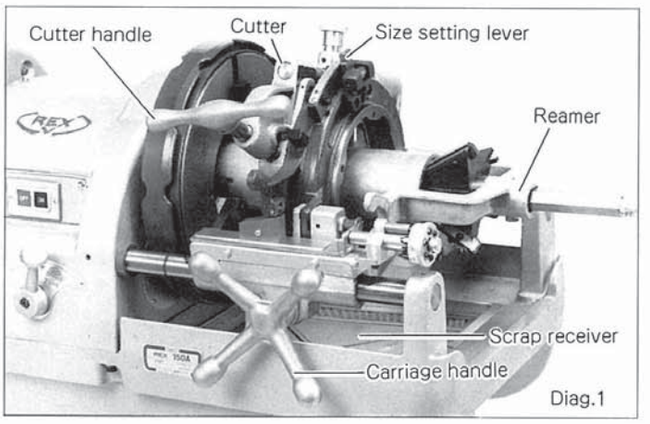

Diag.1

■ Transportation

It is not necessary to drain off the oil during transportation.

1. Insert a short pipe and close the chuck firmly

   Caution:

   Make sure the length of the pipe is short enough to allow the die head to be lowered into position for transportation.
2. Release the size-setting lever, open the dies as far as they will go and then replace the setting lever on the corresponding pin.
3. Lock the reamer arm in the reaming position.
4. Lower the pipe cutter; turn the carriage handle clockwise to advance towards chuck side.
5. Turn the cutter handle, and secure the roller and pipe. The machine should then de secure during transportation.

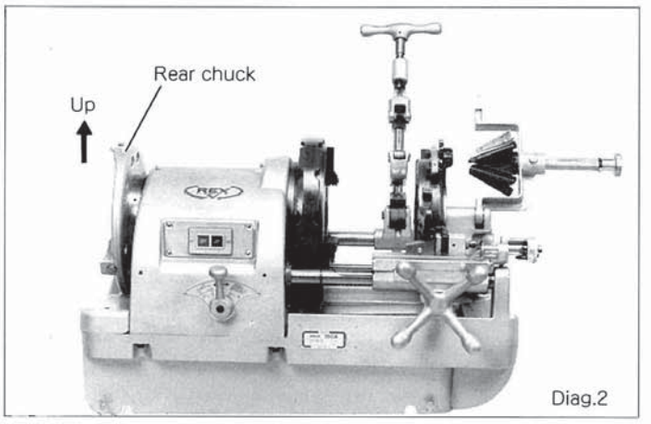

Diag.2

■ Setting Up

1. When setting up the machine, the legs should be adjusted with the rear chuck higher than the hammer chuck so that oil does not flow back down the pipe being cut. (see diagram 2)

   Make sure you set up the 150A so that the rear chuck end of the machine is 1-2cm higher than the opposite end.
2. Remove the tank upper, and check that the level of the oil adequately covers the strainer.
3. Set the oil cover and scrap receiver in the right position.

Operating Voltage

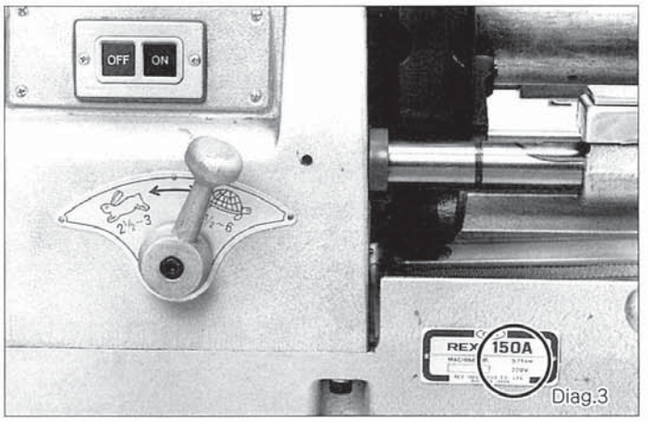

Diag.3

■ Power supply

Before use, check the voltage on the name plate. Ensure the voltage selector switch located on the nameplate above the On-Off switch, is set to the appropriate voltage.(220V)

■ Operating Voltage

Use only an AC power supply and always ground the machine before use. If an extension cord is used, it must be as short as possible and of sufficient capacity for the power supplied.

Input voltage should not vary by more than 10% of the specified supply. Always check the voltage before operating the machine. An incorrect voltage could seriously damage the motor.

Operating Gulde

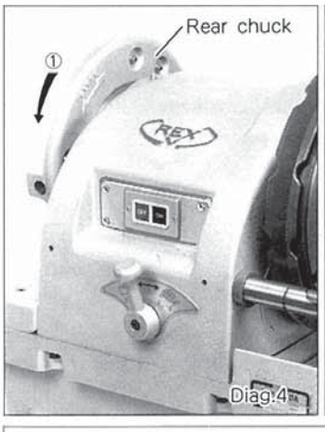

Diag.4

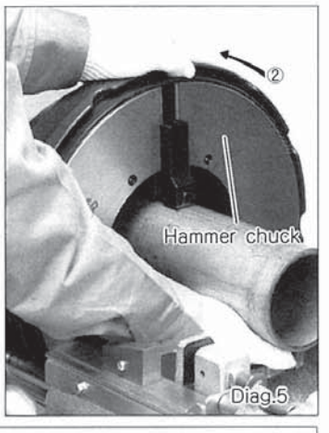

Diag.5

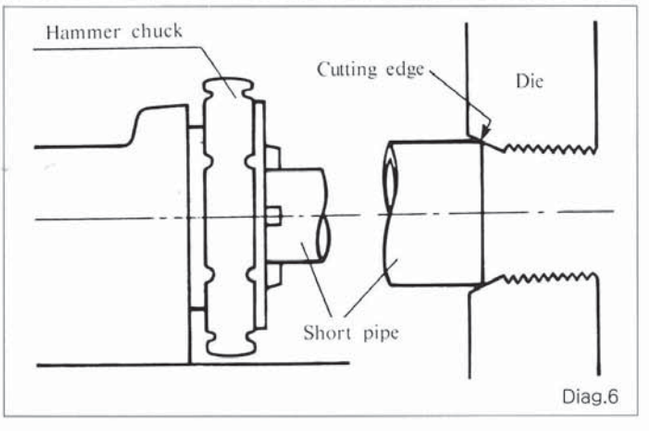

Diag.6

■ Setting the Pipe

1. Open both chucks wider than the size of the pipe to be cut and insert the pipe from the rear chuck side where possible.
2. Close the rear chuck and, holding the pipe in your right hand, close the hammer chuck to grip the pipe. Jerk the hand-wheel sharply towards you to lock.
3. A sharp jerk in the opposite direction will release the pipe after cutting has been completed.

■ Hints for Short Pipes

Setting a short pipe(which does not reach the rear chuck). With the hammer chuck slightly loose, move the pipe into contact with the dies as shown in the diagram.

This will help hold the pipe on center while the hammer chuck is tightened. In this way a smooth taper cut is ensured every time.

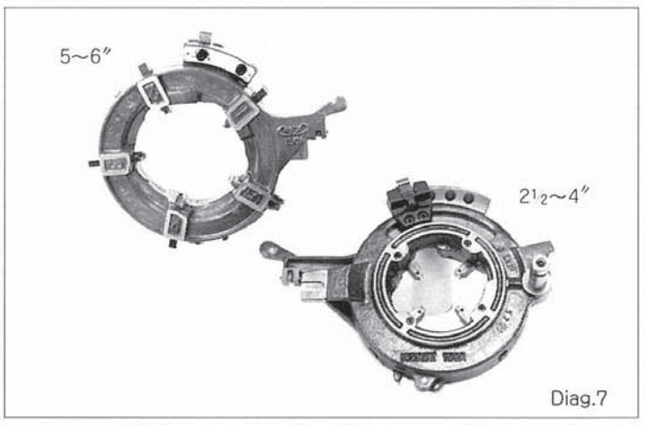

Diag.7

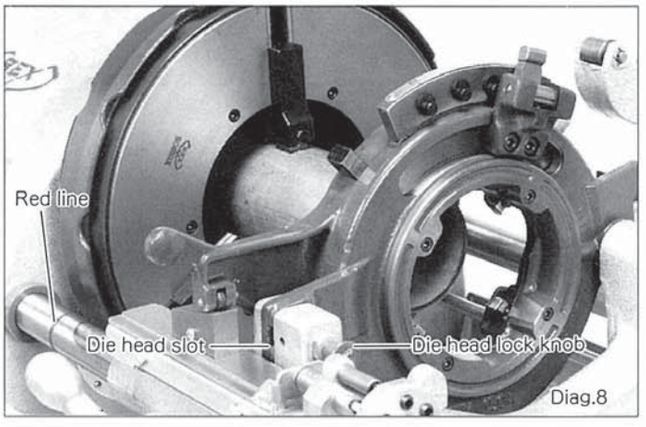

Diag.8

■ 2½-6″ Pipe Taper Threading (Profiling die head)

The size setting lever on this profiling 2½-6″ die head allows for a simple and accurate change of threading size.
Thread thickness can be adjusted independent of pipe size.

■ preparation for Threading

Begin threading to the right of the red line on the carriage support bar.

1. Attach the appropriate die head according to the size of the pipe to be worked on.
   Make sure the die head is properly in position in the die head slot. Ensure there is no scrap in the slot, or the die head lock knob will fail to engage properly.

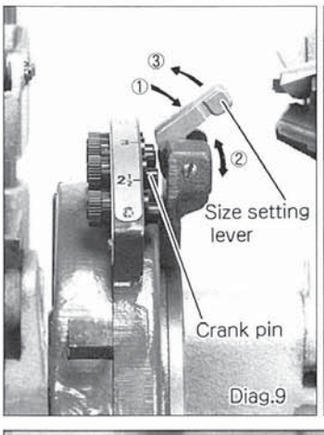

Diag.9

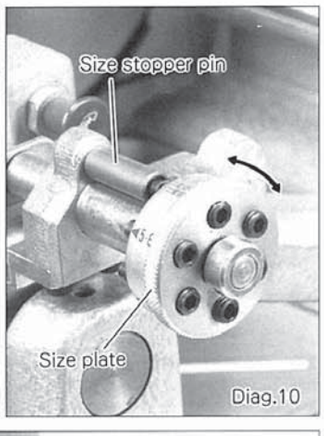

Diag.10

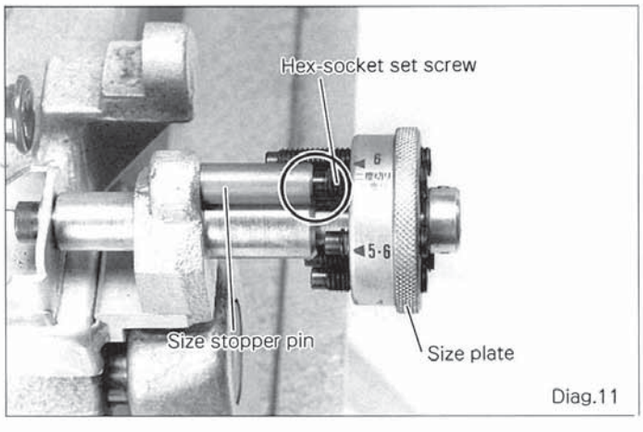

Diag.11

2. Place the size setting lever over the appropriate crank pin. (Diag. 9)

3. Turn the size plate and select the appropriate size setting by aligning the hex-socket set screw with the size stopper pin. (Diags. 10 & 11)

Note:
The hex-socket set screw must fit into the stopper pin correctly or else inaccurate thread lengths will be produced.

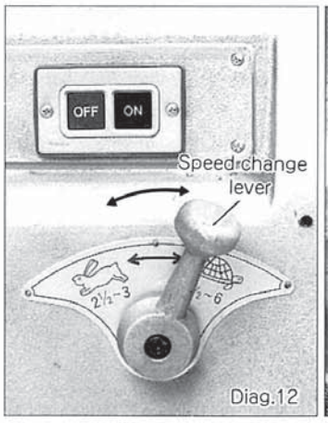

Diag.12

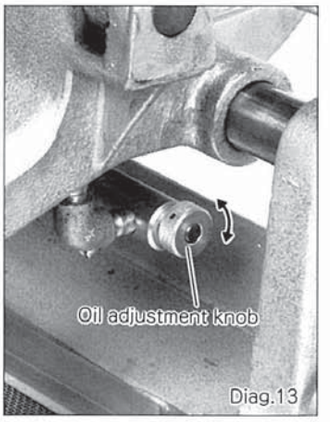

Diag.13

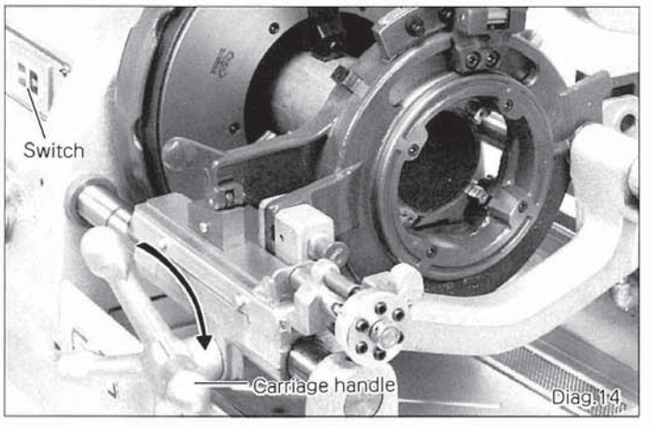

Diag.14

4. Switch on. shift the speed change lever to the appropriate position for the pipe.(Diag.12)
   The speed may be changed even when the machine is at rest. However, if the lever seems stiff, pull the hammer chuck towards you by hand and try to engage the lever again.
   The oil flow from the die head begins as soon as the machine is switched on. If the flow is either excessive or insufficient, the oil flow may be regulated by the oil adjustment knob. (Diag.13)
5. Turn the carriage handle to the right to engage the dies with the pipe.
6. Stop turning the carriage handle once the dies have traveled the width of one die along the pipe. From this point, threading can be done automatically.

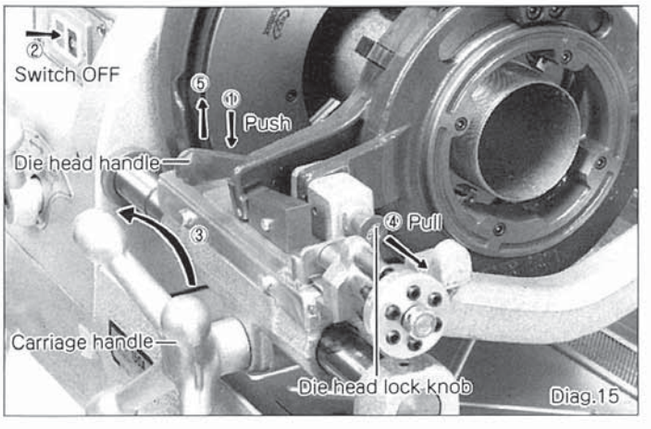

Diag.15

7. When threading has been completed, push the die head handle downwards to automatically release the dies.
8. Switch off and turn the carriage handle to the left to remove the die head from the pipe.
   Raise the die head handle slightly and the profiling board will automatically return to its former position.
9. Pull out the die head lock knob and fully raise the die head.

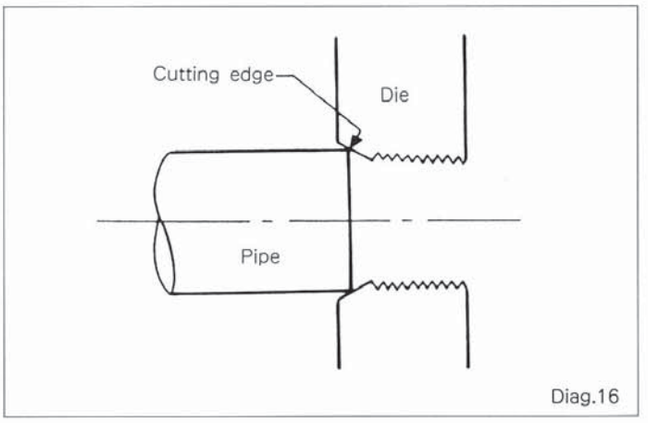

Diag.16

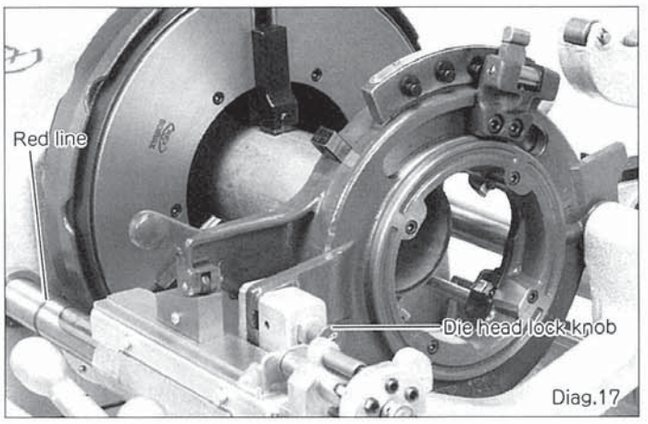

Diag.17

■ Precautions for Threading

1. As the dies come into contact with the pipe, the carriage handle should be turned with gradually increasing strength until the dies are biting firmly. After the dies fully engage the pipe they will travel smoothly by themselves, but optimum cutting will be assured if the carriage handle is turned with slight pressure to keep pace with die movement.
2. Be sure to start threading with the carriage right of the red line on the front support bar. If threading starts left of the red line the die head can strike the chuck and damage the machine.

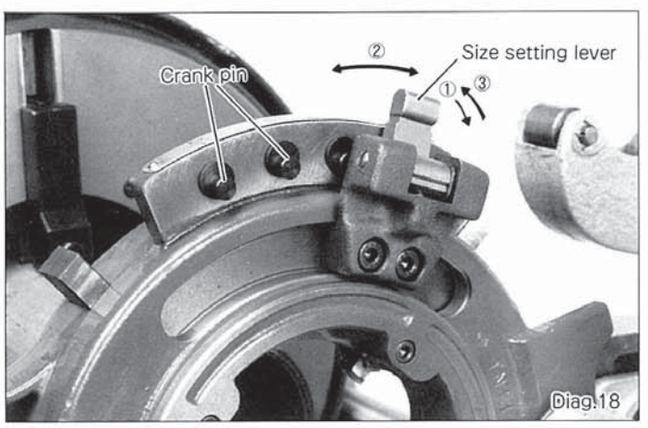

Diag.18

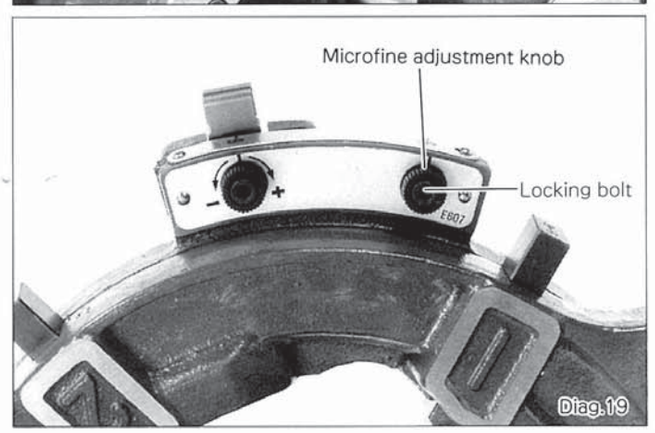

Diag.19

■ Microfine Adjustment of Thread Thickness

Microfine adjustment of thread thickness is possible to allow pipes to be cut to exactly your own requirements.
Simply turn the microfine adjusment knob to the teft to decrease, and to the right to increase the thread thickness.
The knob is locked by a locking bolt which should be loosened with the hexagonal key provided and the knob turned three settings to the right before adjustments are made.
One setting on the knob represents 1.5 threads on both the 2½-4″ and the 5-6″ die heads.

Note:

Size should always be checked with a thread gauge after adjustment.

■ Change of Size

Size change is simple with the size setting lever.

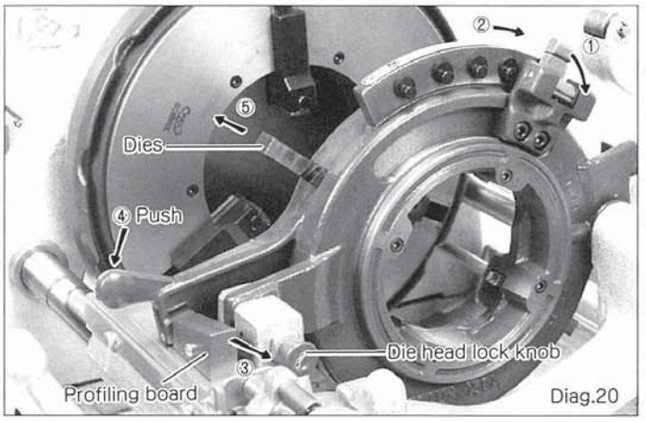

Diag.20

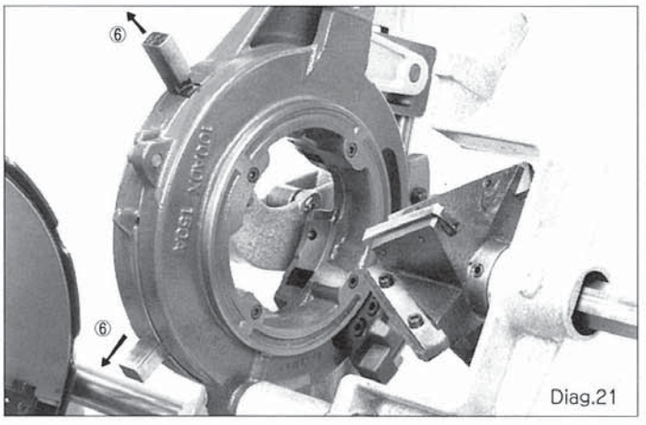

Diag.21

■ Removal and Replacement of the Dies

■ Removing the dies

1. Move the profiling board to the right until the die head roller touches the profiling cover.

2. Turn the size setting lever to the right and then push it as far as it will go beyong the 4″ setting.
   Then remove No. 1 and No. 2 dies.
3. Pull out the die head lock knob and raise the die head to remove dies No. 3 and No. 4(No. 5).

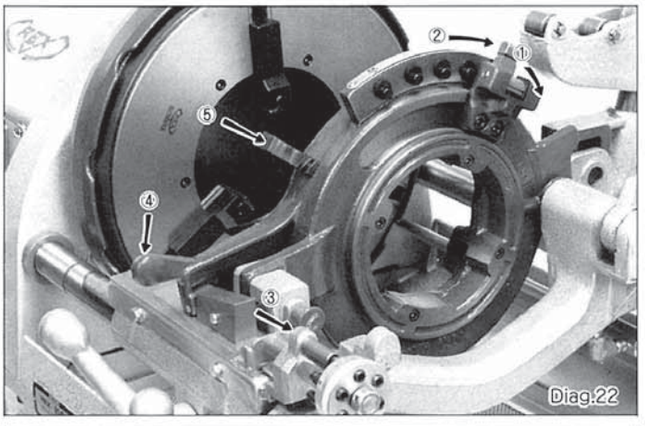

Diag.22

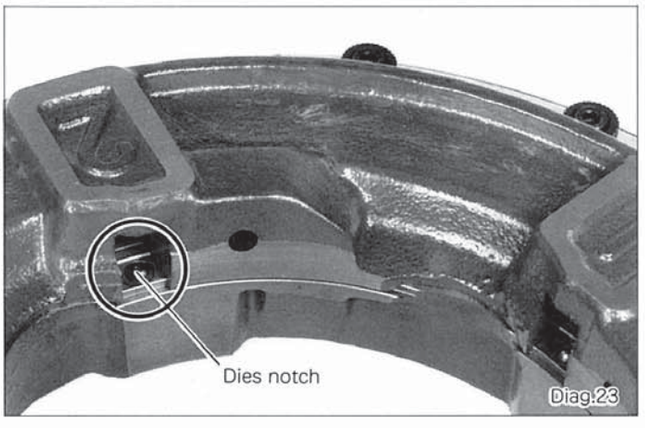

Diag.23

■ Replacement of dies

1. With the die head in the raised position, pull the handle on the body of the die head forwards and insert dies Nos. 3 and 4(5) in their corresponding slots, ensuring they engage the notch in the die head.
2. Move the profiling board to the right until the die head roller touches the profiling cover. Insert dies 1 and 2 into their corresponding slots.

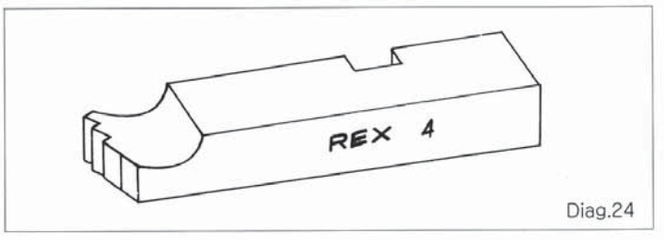

Diag.24

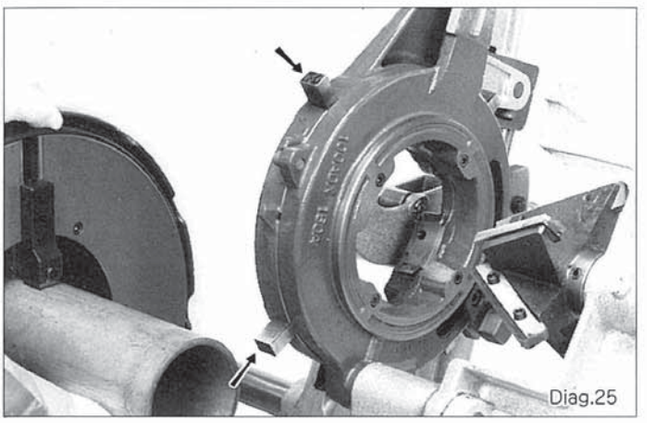
Diag.25

3. Reset the size setting lever to the threading size required.

Note:

When a die is installed to the correct depth in the die holder slot, a detent will engage the detent notch. The die is then properly positioned.

Steps 1 and 2 above may be reversed.

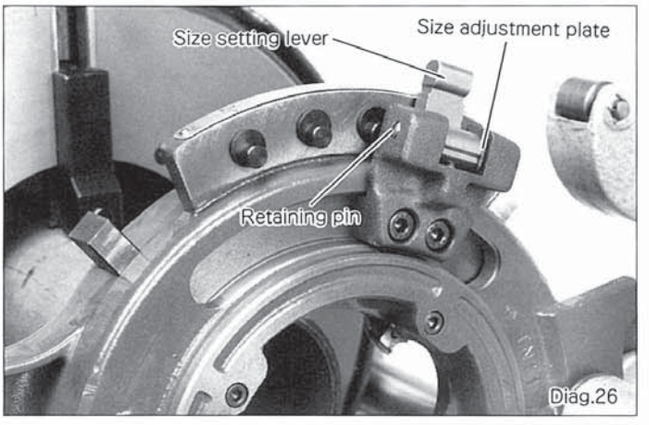

Diag.26

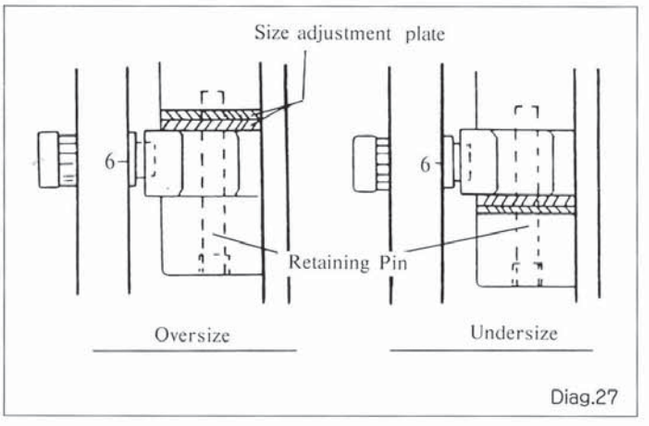

Diag.27

■ Size Adjustment Plate

If, even with full adjustment , thread size is not satisfactory, remove the retaining pin and reinsert the size adjustment plates as shown in the diagram. Reinsert the retaining pin to hold in place.

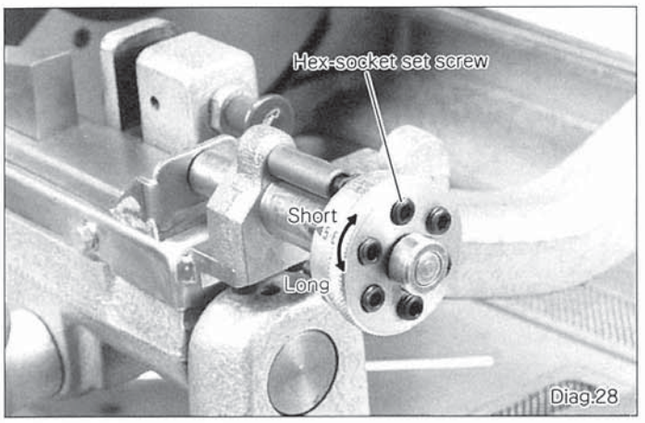

Diag.28

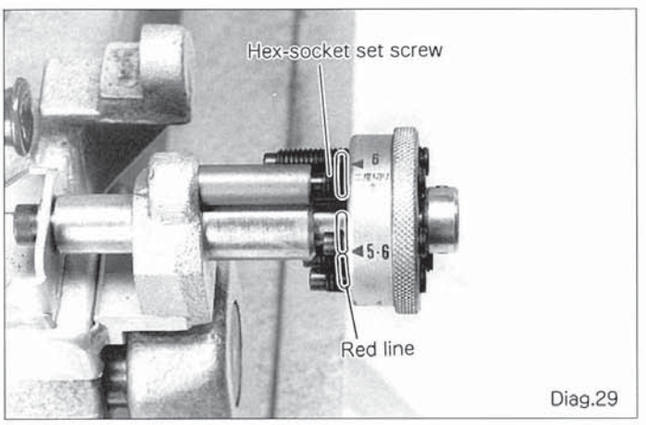

Diag.29

■ Adjustment of Threading Length

The machine is designed to produce threads of standard length but thread length may be individually increased or decreased by turning the appropriate hex-socket set screw in the thread length knob. Whichever size is selected, one revolution to the right will increase thread length by 1.5mm, and conversely, one revolution to the left will decrease thread length by the same amount.

There is no need to 'lock' the screws in position.

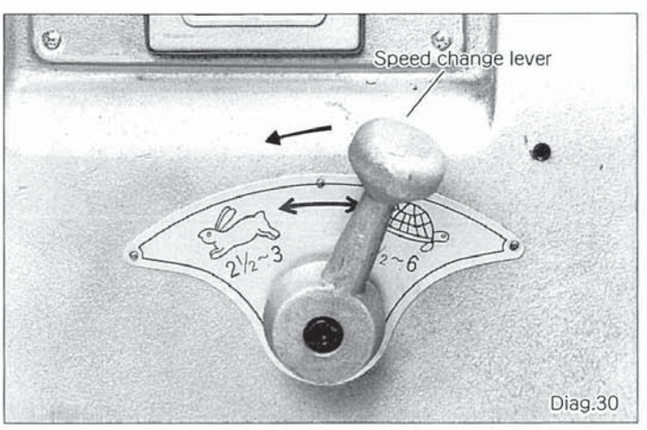

Diag.30

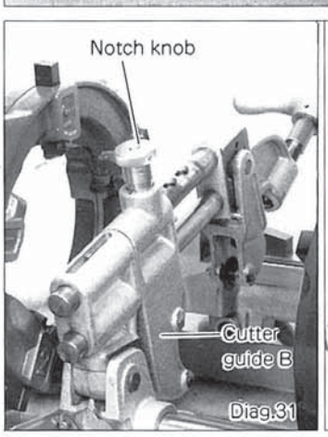

Diag.31

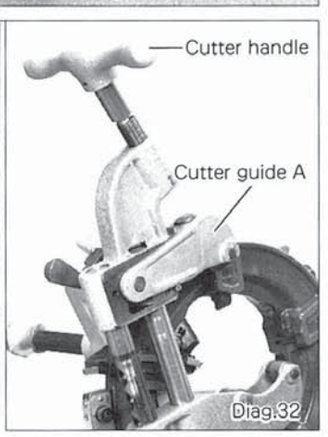

Diag.32

■ Cutting

Cutting should be done at the higher rotation speed.

1. Set the speed change lever to the position marked 2½- 3″.
2. Raise the die head and the reamer.
3. Pull the notch knob out and slide guide B to its fully-open position.
4. Turn the cutter handle anti-clockwise. Once guide A is fully open, raise the cutter and insert the pipe.
5. Select a suitable position on the pipe for cutting and tighten the hammer chuck securely.
6. Lower the cutter on the position for cutting.
7. Holding the notch knob out, slide guide B back into contact with the pipe.
8. Turn the cutter handle to the right and lightly engage the pipe pipe with the roller and the cutting blade.

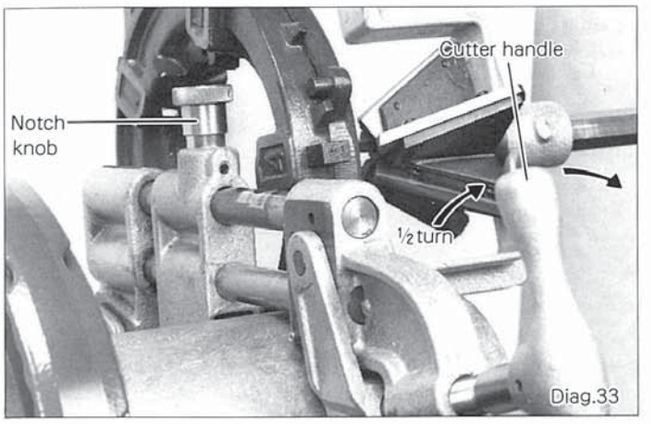

Diag.33

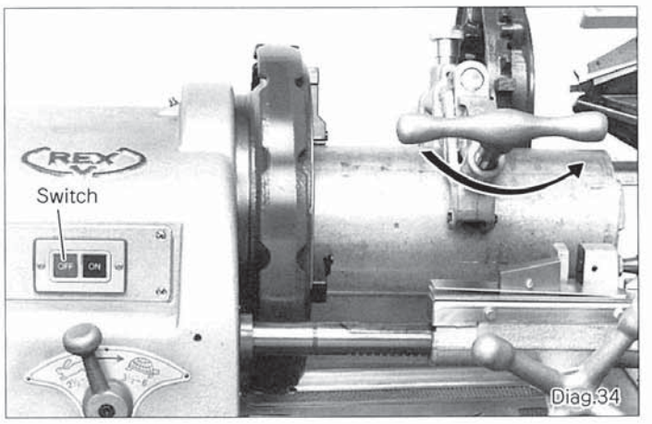

Diag.34

9. Switch on, and turn the cutter handle one half turn to the right for each revolution of the pipe.(Diag. 33)

CAUTION:
Avoid turning the cutter handle too quickly, or too much pressure will be applied giving imperfect results.

10. When cutting is complete, turn the cutter handle to the left, switch off, open guide A, pull out the notch knob, slide guide B fully back and lift up the cutter.

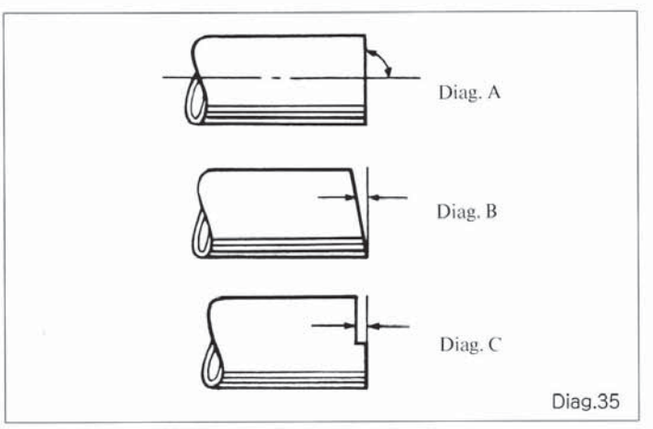

Diag.35

■ Special Cut Grinder Precautions
We strongly recommend that only the pipe cutter attached to the machine be used to cut pipes that are to be threaded. If a grinder is used, make sure that the cut face is square and without steps as in diag A.
Diags B and C show faults common to grinder cutters.

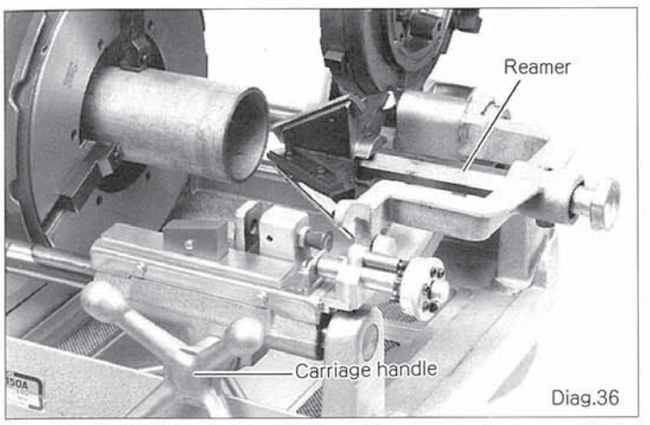

Diag.36

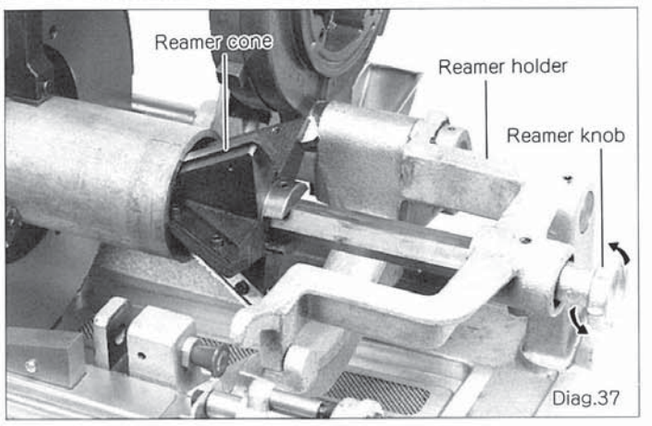

Diag.37

■ Reaming

1. Raise the die head and cutter out of the way and set the speed change lever to the fast position. Lower the reamer arm and push the reamer bar toward the pipe, locking the bar in position with ¼ turn.
2. Start the machine and turn the carriage handle clockwise to feed the reamer into the pipe.
3. When reaming is complete turn off the machine, retract the reamer bar and raise the reamer arm into the rest position.

CAUTION:

When processing a stainless steel pipe, use the same rotation speed for reaming as used for threading the pipe.

Optional Specifications and Accessories

■ Optional Specifications

■ Reversible Rotation

1. Forward rotation
   Forward and reverse are operated by hand switch.
   Cutting oil is supplied for both directions.

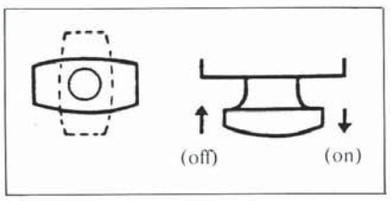

2. Reverse Rotation
   Turn the handle switch to the position indicated, then pull it out to start the machine.

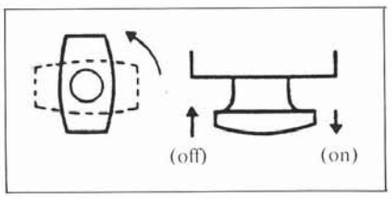

■ Changing Voltage

- Some models are equipped for either 110V or 220V. First check which voltage applies in your work area. To change voltage, remove the switch cover and turn the switch to the appropriate voltage.
  If 220V is selected, the small lamp above the switch comes on. (This does not happen when 110V is used.) Always replace the switch cover after changing voltage.
- When using a 220V power supply, remove the 110V rubber plug and replace with one which is suitable for 220V. As with 110V, ensure a grounding.

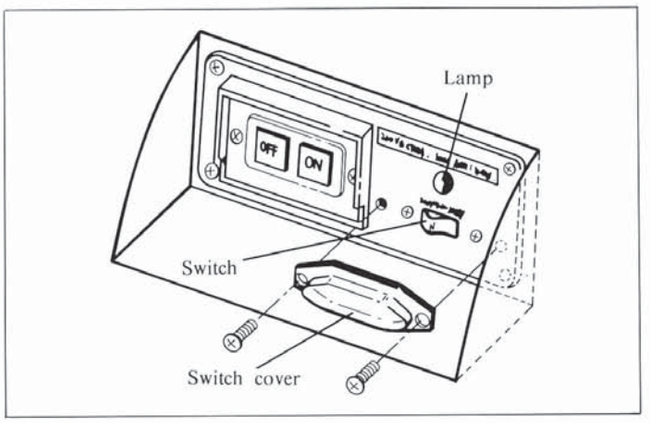

■ Optional Accessories

Grooving heads:	Profiling(2½-4″)(5-6″)
(Beveling) Grooving dies:	Profiling(2½-3½″)(4″)(5-6″)
Beveling dies:	Profiling(2½-4″)(5-6″)
Nipple attachment:	NPT 2½, 3, 3½, 4
Cutting Oil:	Miyagawa 50W 16ℓ (Water soluble), Miyagawa 246 18ℓ

■ Other Accessories

Transporter
Pipe support

Maintenance

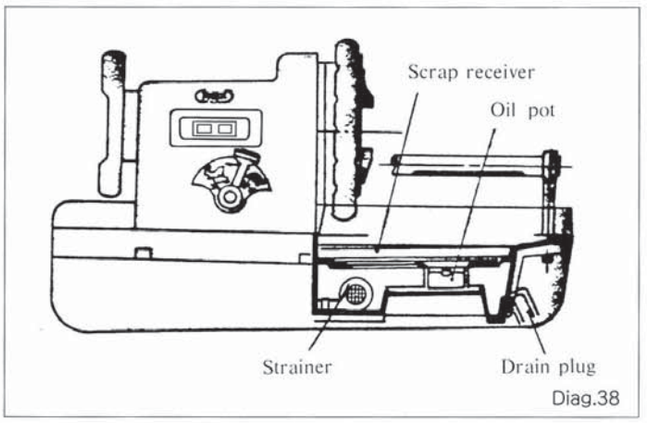

Diag.38

■ Cutting Oil System

1. Be sure the oil flows freely. See that there is enough oil in the tank and all oil lines are free from obstructions.
2. If oil becomes discolored or contaminated, drain the tank and refill with fresh cutting oil.
3. Clean oil pot after every 8 to 12 hours of actual use.
4. During thread cutting operations, small chips from the threads will accumulate in the tank so efficient cleaning is essential to ensure proper operation.

■ Keep Oil System Clean as Follows

1. Drain oil and check for contamination.
2. Remove and clean scrap receiver, tank upper cover, oil pot and strainer, and clean the oil tank.

If the oil system is kept clean, this will prolong the working life of the gear-pump.

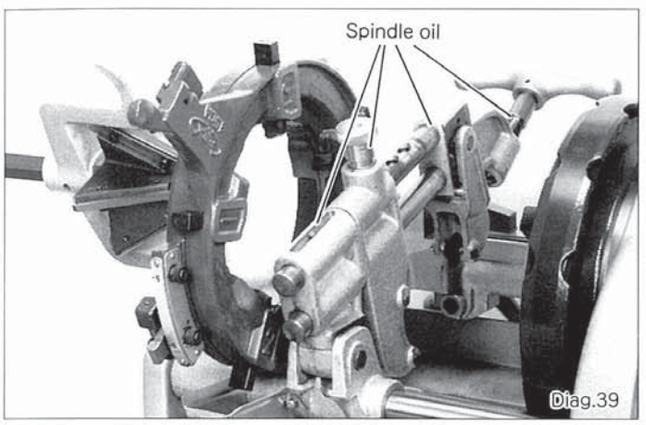

Diag.39

■ Pipe Cutter

1. Check cutter wheel and replace if blunt or damaged.
2. Clean and oil the feed screw and cutter roller.
3. Check alignment of cutter frame feed screw, roller pins and cutter pin.
4. Clean and lubricate cutter wheel and cutter pin. Lubricate cutter wheel pin with a thick, heat resistant oil additive such as Bardahl, S.T.P. or equiv.

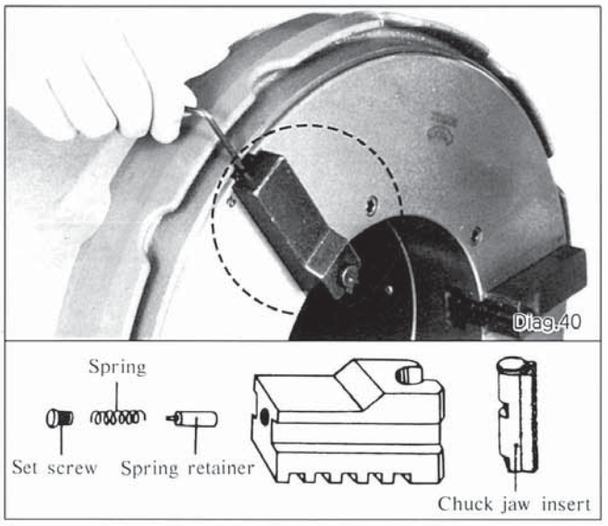

Diag.40

■ Chuck Jaw Inserts

If chuck jaw inserts show significant wear or damage replace them all, not just one or two.

Be sure to line up the chuck jaw in the correct position on the handwheel.

■ Removal of Chuck Jaw Inserts

1. Remove hex-socket set screws with hexagonal key.
2. Remove springs and spring retainers.
3. Take out chuck jaw inserts.

■ Installation of Chuck Jaw Inserts

1. Put new chuck jaw inserts in position.
2. Install spring retainers, then springs.
3. Install hex-socket set screws.

CAUTION:

Screw in hex-socket set screws till they turn no further.

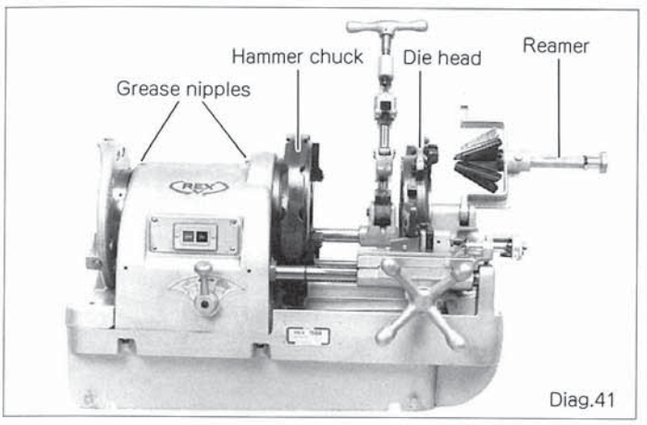

Diag.41

■ Main Shaft

Lubricate bearings for hollow spindle through the two grease nipples in the head stock.

■ Hand Wheel Chuck

Check that all chuck mounting screws are tight.

■ Reamer

Clean and lightly oil reamer cone and shaft.

■ Die Head and Dies

1. Clean die head and dies.
2. Check dies for broken teeth or pipe material between teeth.

Wiring Diagram

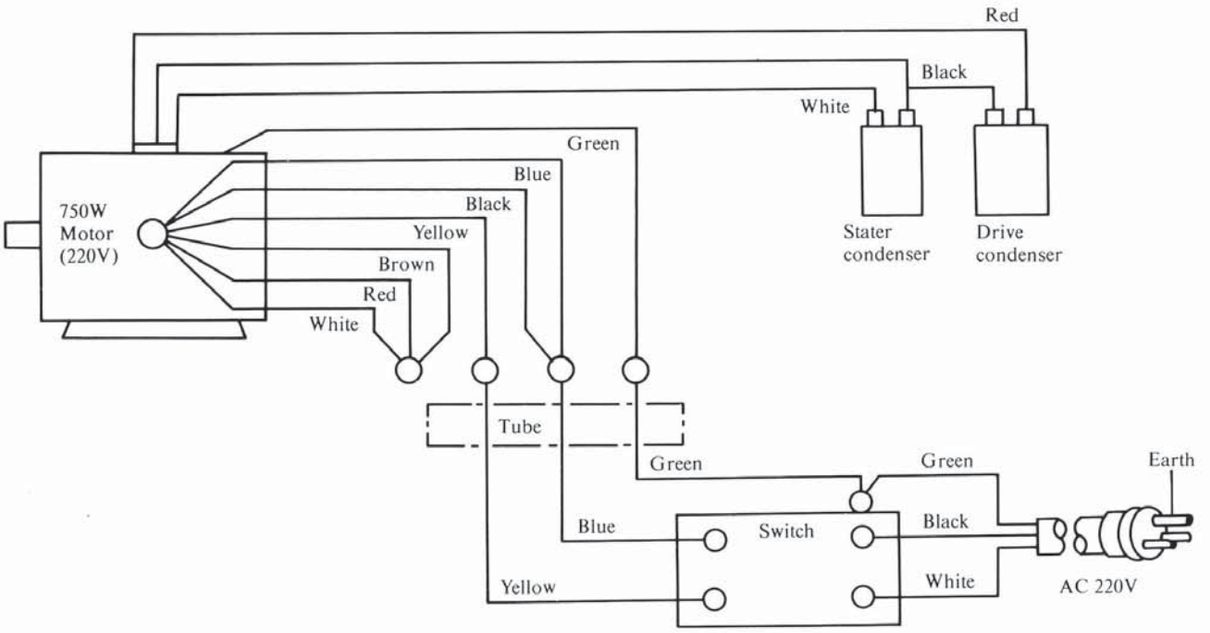

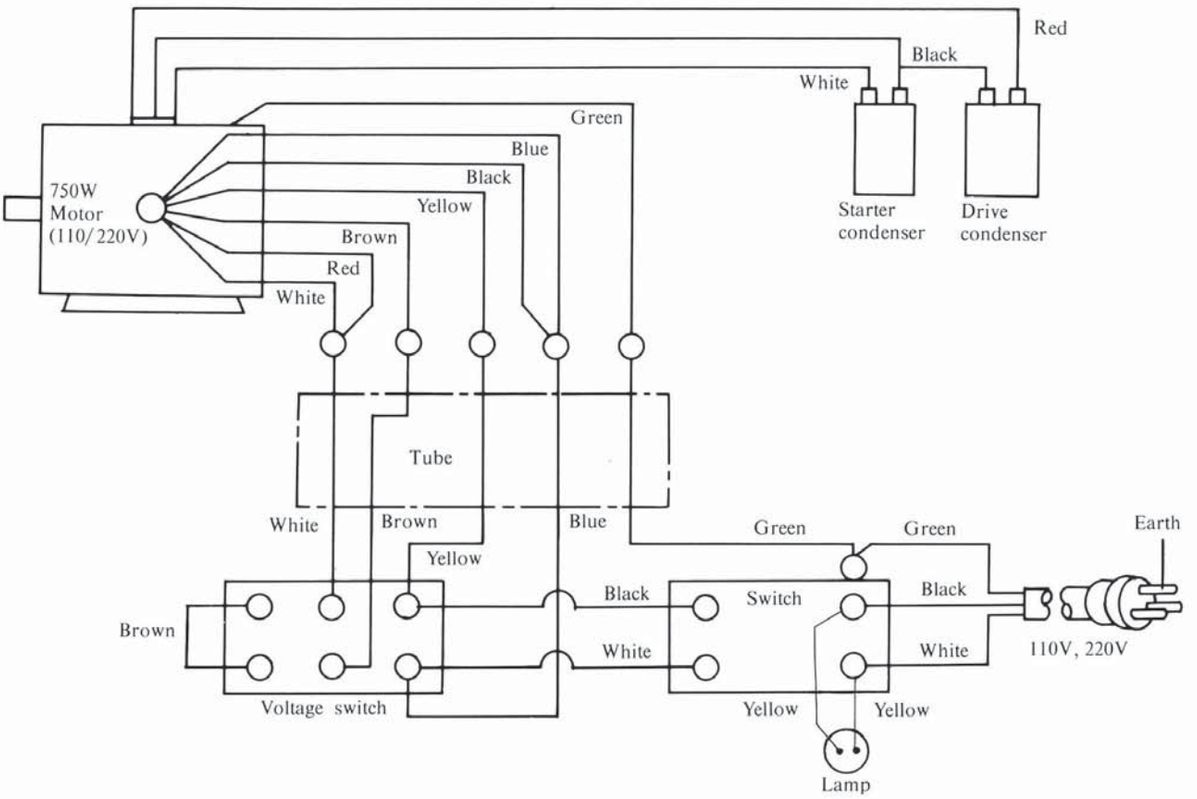

⚠ Guarantee and Exemption from Liability

1. Should the machine happen to break down for no apparent reason, despite normal and correct use, repairs and service parts shall be provided free of charge as outlined below.

   Repairs shall be provided free of charge for a period of one year from date of purchase.
   Dates, procedures and methods for providing repairs and service parts shall be decided in consultation with the customer.
   After the one-year guarantee period, all repairs and service parts will be charged.
   Repairs may be charged even within the guarantee period under the following circumstances:
   - if the machine has not been used according to the instructions in the Operation Manual
   - if it has been used for anything other than its intended purpose
   - if it has not been repaired according to the Operation Manual or if it has been remodeled
   - if blades or consumables need replacing
   - if the machine has been handled in an inappropriate way.

2. REX will accept no responsibility under the following circumstances:
   - if a malfunction or accident occurs as a result of fire, abnormal fluctuations in voltage, damage from flood, earthquakes, lightning or other natural disasters, war, conflict, riot, terrorism or pollution, etc.
   - when the machine has not been operated according to the Operation Manual
   - when the machine has been used incorrectly, repaired or remodelled inappropriately
   - when a malfunction or accident results from using a thread made on the machine, or leaving it lying around and/or exposed to the elements
   - when a malfunction or accident results from using a thread produced on the machine either while or after connecting it to a joint.

3. Any costs incurred by the manufacturer shall not exceed the purchase price of the machine.

REX

www.rexind.co.jp

REX INDUSTRIES CO., LTD.

Overseas Sales Section & Factory :
1-9-3, Hishiya-higashi, Higashi-Osaka 578-0948, Japan.
Tel.:+81-(0)72-961-9820 Fax.:+81-(0)72-961-9878

URL www.rexind.co.jp

1A790-E3
150A
1712 R 0000